Instruction Manual

Unique Single Seat Valve - Tangential

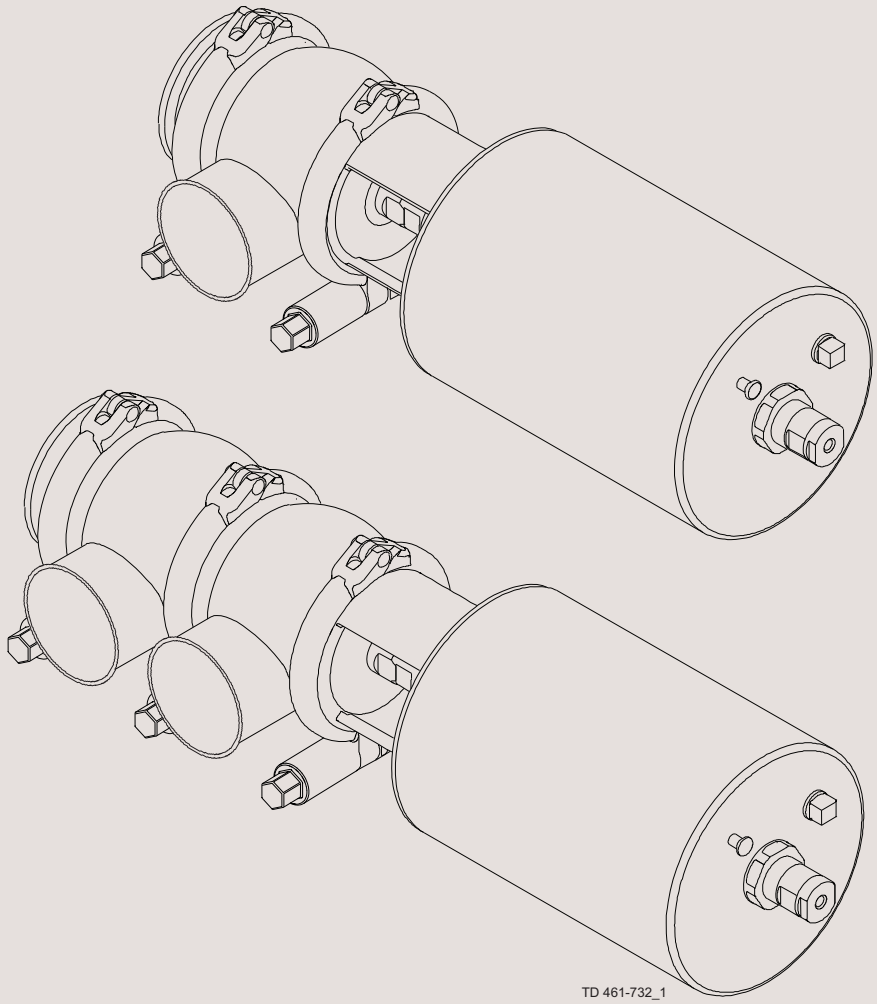

ESE00692-EN7 2016-12

Original manual

Table of contents

The information herein is correct at the time of issue but may be subject to change without prior notice

1. EC Declaration of Conformity 4

2. Safety 5
2.1. Important information 5
2.2. Warning signs 6
2.3. Safety precautions 7

3. Installation 9
3.1. Unpacking/delivery 9
3.2. General installation 10
3.3. Welding 12
3.4. Recycling information 13

4. Operation 14
4.1. Operation 14
4.2. Troubleshooting 16
4.3. Recommended cleaning 17

5. Maintenance 18
5.1. General maintenance 18
5.2. Dismantling the valve 20
5.3. Plug seal replacement 21
5.4. Valve assembly 24
5.5. Actuator types 25
5.6. Actuator bushing replacement (non-maintainable actuator) 26
5.7. Dismantling of fully maintainable actuator (removable yoke with bolts/2006-June 2016) . 31
5.8. Dismantling of fully maintainable actuator (yoke without bolts/June 2016 ->) 32
5.9. Mounting of fully maintainable actuator 32
5.10. Changing pneumatic movement on fully maintainable actuator (NC/NO) 33

6. Technical data 34
6.1. Technical data 34

7. Parts list and Service Kits 35
7.1. Drawing 35
7.2. Unique SSV - Tangential - Shut off Valve 36
7.3. Unique SSV - Tangential - Change Over Valve 38
7.4. Maintainable actuator 40

1 EC Declaration of Conformity

Revision of Declaration of Conformity 2013-12-03

The Designated Company

Alfa Laval Kolding A/S
Company Name

Albuen 31, DK-6000 Kolding, Denmark
Address

+45 79 32 22 00
Phone No.

hereby declare that

Valve
Designation

Unique SSV PN10
Type

From serial number 5099880 to 29999999999

is in conformity with the following directive with amendments:

- Machinery Directive 2006/42/EC
- Pressure Equipment Directive 2014/68/EU category 1 and subjected to assessment procedure Module A. May only be used for fluids in Group 2

The person authorised to compile the technical file is the signer of this document

Global Product Quality Manager Pumps, Valves, Fittings and Tank Equipment		Lars Kruse Andersen
Title		Name
Kolding	2016-06-01	
Place	Date	Signature

Unsafe practices and other important information are emphasised in this manual.
Warnings are emphasised by means of special signs.

2.1 Important information

Always read the manual before using the valve!

WARNING
Indicates that special procedures must be followed to avoid serious personal injury.

CAUTION
Indicates that special procedures must be followed to avoid damage to the valve.

NOTE
Indicates important information to simplify or clarify procedures.

Different actuator types for the SSV valve
In June 2016 the below change was implemented and the “removable yoke with bolts” version is thereby phased out and replaced by the “yoke without bolts” version.

NOTE
It is important to check for warnings marked on the actuator when servicing an actuator - see below table.

Actuator type	Non-maintainable actuator Spring under load and **CANNOT** be opened 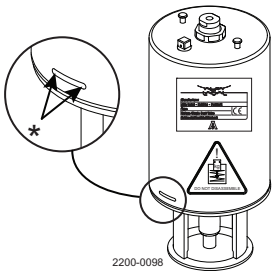 2200-0098 *) Lock wire opening is locked when warning is marked on actuator	Fully maintainable actuator Spring cage and can be opened 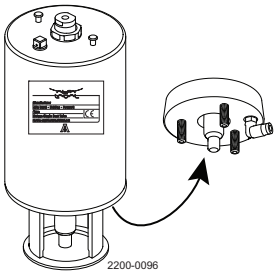 2200-0096	Fully maintainable actuator Spring cage and can be opened 2200-0097
Yoke type	Non-removable yoke	“Removable yoke with bolts”. If the yoke with bolts is damaged it has to be replaced by the “yoke without bolts”	“Yoke without bolts”
Service	Not possible to service internally (it is not possible to change piston O-rings)	Yes	Yes
Marked with warnings	Yes	No	No
Year of production	From 2006	From 2006 to June 2016	From June 2016

2 Safety

Unsafe practices and other important information are emphasised in this manual.
Warnings are emphasised by means of special signs.

2.2 Warning signs

General warning

Caustic agents

Danger of injury: (an extra yellow label marked on the actuator from June 2016)
Do NOT attempt to cut the actuator open due to spring under load.
(The lock wire opening is locked).

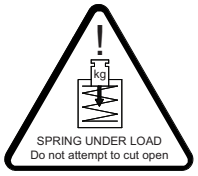

Danger of injury (lasermarked on the actuator)
Do NOT attempt to disassemble the actuator due to spring under load danger!
(The lock wire opening is locked)

All warnings in this manual are summarised on this page.
Pay special attention to this instructions below so that severe personal injury and/or damage to the valve are avoided.

2.3 Safety precautions

Actuators

If support air is utilised:

- Shock in the actuator must **NEVER** occur
- Support air on high pressure actuator versions is **NOT** allowed

To prevent shock in the actuator and to prevent exceeding 10 bar product pressure, Alfa Laval recommends **NOT** to exceed 3 bar support air on the spring side in all the Unique SSV actuators.

Use the “3 bar air relief fitting” = 9611995903
Using the “3 bar air relief fitting” also extends the service life of the actuator piston O-ring.

If support air is connected then the following must be done:
- **Always** use the steel adapter (pos. 5) = 9614065301
  Tighten torque 30 Nm
- **Always** use the 3 bar air relief fittings = 9611995903

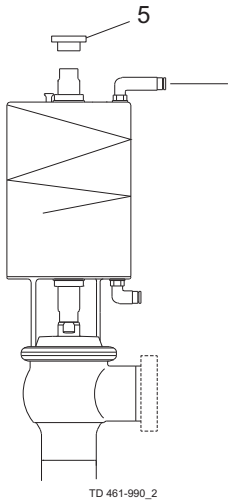

Alfa Laval recommends max. 3 bar support air
Always use the “3 bar air relief fittings” on support air.
Alfa Laval article number = 9611995903

2 Safety

All warnings in this manual are summarised on this page.
Pay special attention to this instructions below so that severe personal injury and/or damage to the valve are avoided.

Installation

Always read the technical data thoroughly (see section 6 Technical data)
Always release compressed air after use
Never touch moving parts if the actuator is supplied with compressed air
Never touch the valve or the pipelines when processing hot liquids or when sterilising
Never dismantle the valve with valve and pipelines under pressure
Never dismantle the valve when it is hot

Never cut the actuator open, due to spring under load - if marked with this warning

Do **NOT** attempt to disassemble the actuator due to spring under load danger!

Operation

Never dismantle the valve with valve and pipelines under pressure
Never dismantle the valve when it is hot
Always read the technical data thoroughly (see section 6 Technical data)
Always release compressed air after use
Never touch the valve or the pipelines when processing hot liquids or when sterilising
Never touch moving parts if the actuator is supplied with compressed air
Always rinse well with clean water after cleaning

Always handle lye and acid with great care

Maintenance

Always read the technical data thoroughly (see section 6 Technical data)
Always release compressed air after use
Never service the valve when it is hot
Never service the valve with valve and pipelines under pressure
Never stick your fingers through the valve ports if the actuator is supplied with compressed air
Never touch moving parts if the actuator is supplied with compressed air
Always use Alfa Laval genuine spare parts

Never cut the actuator open, due to spring under load danger - if marked with this warning

Do **NOT** attempt to disassemble the actuator due to spring under load danger!

Transportation

Always ensure that compressed air is released
Always ensure that all connections are disconnected before attempting to remove the valve from the installation
Always drain liquid out of valves before transportation
Always use predesigned lifting points if defined
Always ensure sufficient fixing of the valve during transportation - if specially designed packaging material is available, it must be used

The instruction manual is part of the delivery. Study the instructions carefully.
The items refer to parts list and service kits section.
The valve is supplied as separate parts as standard (for welding).
The valve is assembled before delivery, if it is supplied with fittings.

3.1 Unpacking/delivery

Step 1
CAUTION
Alfa Laval cannot be held responsible for incorrect unpacking.

Check the delivery for:
1. Complete valve, shut-off valve or change-over valve (see steps 3a and 3b).
2. Delivery note.

Step 2
Actuator version can be ordered either “fully maintainable” (no warning marked on actuator) or as “non-maintainable” (warning marked on actuator).

Non-maintainable actuator

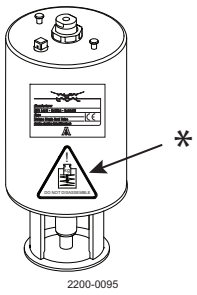

Fully maintainable actuator

* = lasermarked warning

Step 3

3a
Shut-off valve:
1. Complete actuator.
2. Bonnet (20).
3. 2 x Clamp (19).
4. Valve plug (23).
5. Valve body (26).
6. Port seal element (63).

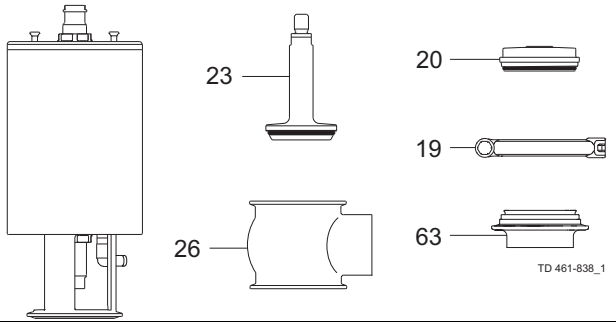

3b
Change-over valve:
1. Complete actuator.
2. Bonnet (20).
3. 3 x clamp (19).
4. Valve plug (27).
5. Valve seat (28).
6. 2 x upper valve body (26).
7. Port seal element (63).

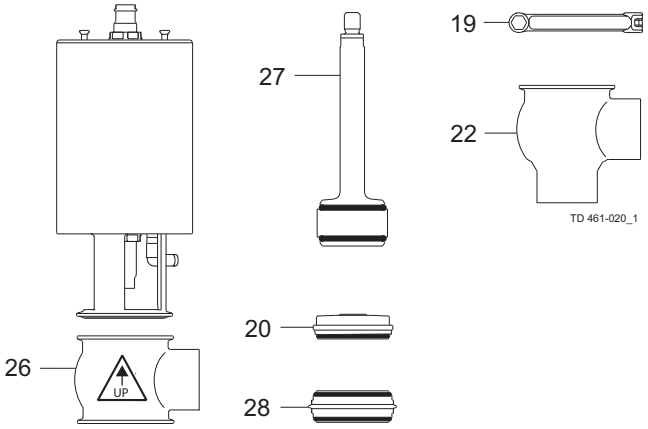

Step 4
Remove possible packing materials from the valve / valve parts.
Inspect the valve / valve parts for visible transport damages.
Avoid damaging the valve/valve parts.

3 Installation

Study the instructions carefully and pay special attention to the warnings!
The valve has welding ends as standard but can also be supplied with fittings.

3.2 General installation

Step 1

- CAUTION
  Alfa Laval cannot be held responsible for incorrect installation.
- **Always** release compressed air after use.
- **Always** read the technical data thoroughly.
  See section 6 Technical data.

Do **NOT** attempt to disassemble the actuator due to spring under load danger!

If marked with this warning, do **NOT** attempt to cut the actuator open, due to spring under load danger!

Step 2

Never touch moving parts if the actuator is supplied with compressed air.

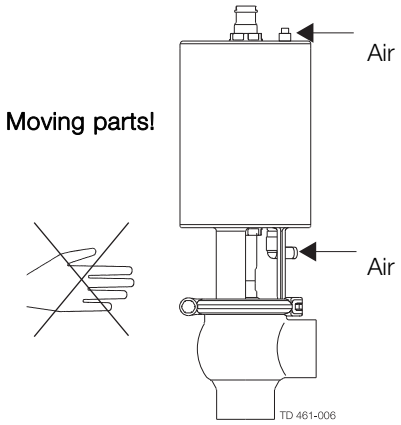

Step 3

To avoid water hammering, it is recommended to install the valve so that the flow is against the spring closing direction.

Shock in the actuator must **never** occur.

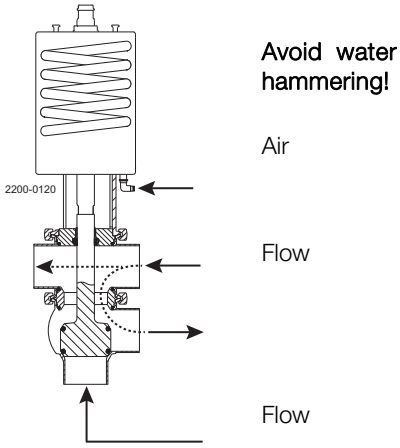

Study the instructions carefully and pay special attention to the warnings!
The valve has welding ends as standard but can also be supplied with fittings.

Step 4
Pay special attention to shock in the actuator due to support air.
Shock in the actuator must **never** occur.

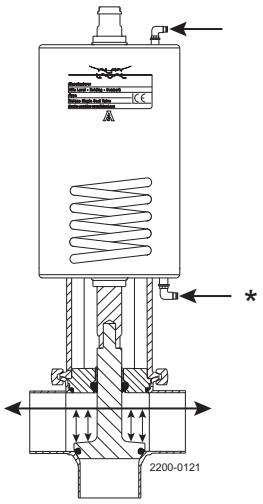

*) Careful if using support air on spring side and a high product pressure above the plug, as this can result in a high “hammer effect” which can damage the actuator.
Use Alfa Laval part no. 9611995903, which ensures max. 3 bar support air pressure.
Alternatively remove the product pressure while activating the plug.

Step 5
Avoid stressing the valve.
Pay special attention to:
- Vibrations.
- Thermal expansion of the pipelines.
- Excessive welding.
- Overloading of the pipelines.

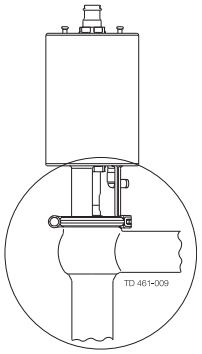

Risk of damage!

3 Installation

Study the instructions carefully.
The valve is supplied as separate parts to facilitate the welding.
The items refer to the parts list and service kits section.
Check the valve for smooth operation after welding.

3.3 Welding

Step 1
Always install valves with more than one valve body so that the seals between the valve bodies can be replaced. Do not weld more than one valve body into the system.

Valve size	A (mm)	B (mm)
DN25/25 mm	*	630
DN40/38 mm	*	700
DN50/51 mm	*	750
DN65/63.5 mm	*	740
DN80/76 mm	*	800
DN100/101.6 mm	*	790

* Depending on body combination and piping solution.

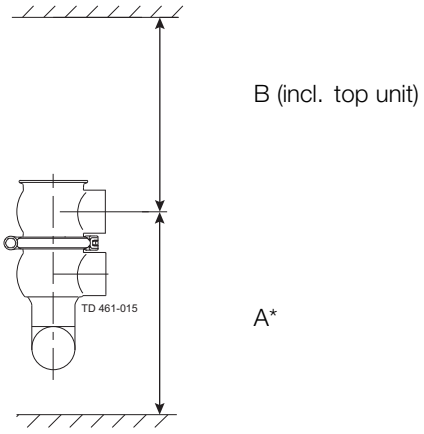

Step 2
Assemble the valve in accordance with the steps on page 24.
Pay special attention to the warnings!

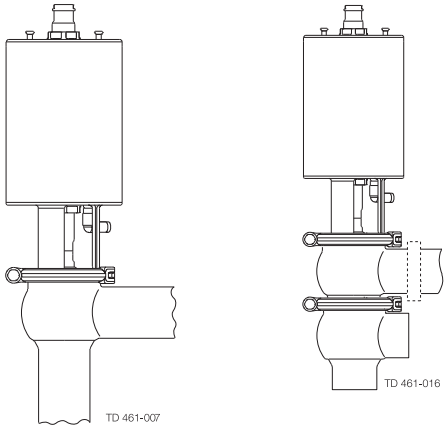

Step 3
Pre-use check:
1. Supply compressed air to the actuator.
2. Open and close the valve several times to ensure that it operates smoothly.

Pay special attention to the warnings!

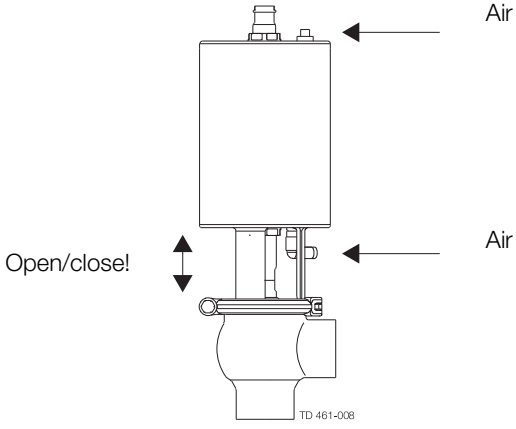

Study the instructions carefully.
The valve is supplied as separate parts to facilitate the welding.
The items refer to the parts list and service kits section.
Check the valve for smooth operation after welding.

3.4 Recycling information

• Unpacking

- Packing material consists of wood, plastics, cardboard boxes and in some cases metal straps
- Wood and cardboard boxes can be reused, recycled or used for energy recovery
- Plastics should be recycled or burnt at a licensed waste incineration plant
- Metal straps should be sent for material recycling.

• Maintenance

- During maintenance oil and wear parts in the machine are replaced
- All metal parts should be sent for material recycling
- Worn out or defective electronic parts should be sent to a licensed handler for material recycling
- Oil and all non metal wear parts must be taken care of in agreement with local regulations

• Scrapping

- At end of use, the equipment must be recycled in accordance with the relevant local regulations. Besides the equipment itself, any hazardous residues from the process liquid must be considered and dealt with in a proper manner. When in doubt, or in the absence of local regulations, please contact your local Alfa Laval sales company. If the actuator is marked with a danger warning, do not attempt to cut the actuator open.

Do **NOT** attempt to disassemble the actuator due to spring under load danger!

If marked with this warning, do **NOT** attempt to cut the actuator open, due to spring under load danger!

4 Operation

Study the instructions carefully and pay special attention to the warnings!
Ensure that the valve operates smoothly.
The items refer to the parts list and service kits section.

4.1 Operation

Step 1

- CAUTION
  Alfa Laval cannot be held responsible for incorrect installation.
- **Always** release compressed air after use.
- **Always** read the technical data thoroughly.
  See section 6 Technical data.
- **Always** use Alfa Laval genuine spare parts.
  The warranty of Alfa Laval products is dependent on use of Alfa Laval genuine spare parts.

Do **NOT** attempt to disassemble the actuator due to spring under load danger!

If marked with this warning, do **NOT** attempt to cut the actuator open, due to spring under load danger!

Step 2

Never touch the valve or the pipelines when processing hot liquids or when sterilising.

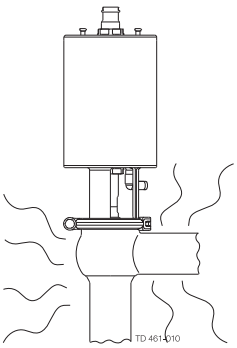

Burn hazard!

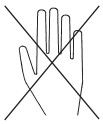

Step 3

Never touch moving parts if the actuator is supplied with compressed air.

Moving parts!

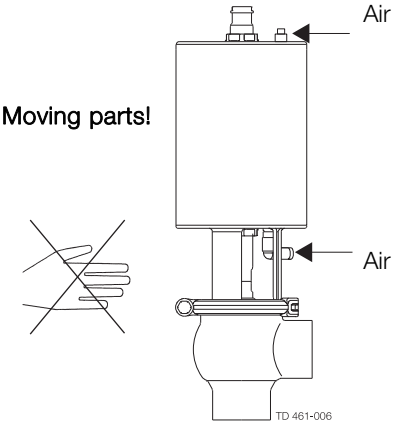

Study the instructions carefully and pay special attention to the warnings!
Ensure that the valve operates smoothly.
The items refer to the parts list and service kits section.

Step 4
Lubrication of valves:
1. Ensure smooth movement between lip seal (A) and plug stem (B).
2. Lubricate the lip seal with Klüber Paraliq GTE 703 if necessary (see page 18).

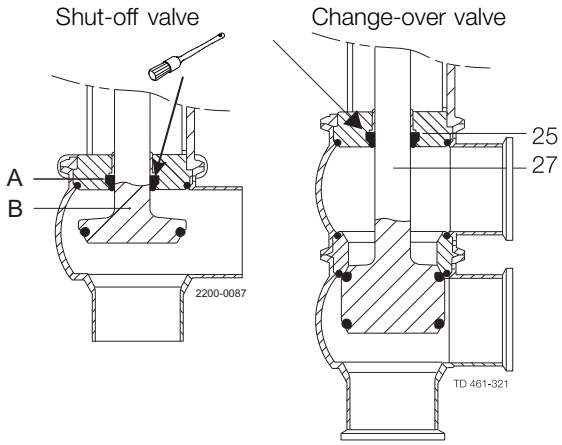

Step 5
Lubrication of actuator
1. Ensure smooth movement of the actuator (the actuator is lubricated before delivery).
2. Lubricate all seals with Molykote Longterm 2 plus if necessary.

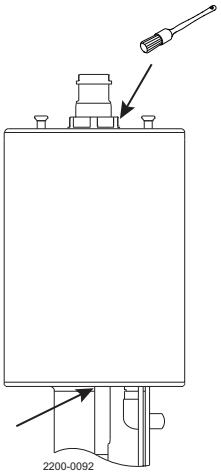

4 Operation

Pay attention to possible faults. Study the instructions carefully.
The items refer to the parts list and service kits section.

4.2 Troubleshooting

NOTE!

Study the maintenance instructions carefully before replacing worn parts. - See page 18.

Problem	Cause/result	Repair
External product leakage	Worn or product affected lip seal and/or O-ring	- Replace the seals - Replace with seals of a different rubber grade
Internal product leakage	- Worn or product affected plug seal	- Replace the seal - Replace with a seal of a different rubber grade
	- Product deposits on the seat and/or plug	- Frequent cleaning
	- Product pressure exceeds actuator specification	- Replace with a high pressure actuator - Use auxiliary air on the spring side (do not exceed 3 bar) Alfa Laval article number = 9611995903. See section 2.3 Safety precautions and section 3.2 General installation, Step 4 - Reduce product pressure
Water hammering	The flow direction is the same as the closing direction	- The flow direction should be against the closing direction. See section 3.2 General installation, Step 3 - Throttle air release of solenoid in top unit
The valve does not open/close	Product pressure exceeds actuator specification	- Replace with a high pressure actuator - Use auxiliary air on the spring side - Reduce product pressure

If marked with a danger warning, do NOT attempt to cut the actuator open, due to spring under load.

Do NOT attempt to disassemble the actuator due to spring under load danger!

Do NOT attempt to cut the actuator open due to spring under load danger!

The valve is designed for cleaning in place (CIP). CIP = Cleaning In Place.
Study the instructions carefully and pay special attention to the warnings!
NaOH = Caustic Soda.
HNO_3 = Nitric acid.

4.3 Recommended cleaning

Step 1

Always handle lye and acid with great care.

Caustic danger!

Always use rubber gloves!

Always use protective goggles!

Step 2

Never touch the valve or the pipelines when sterilising.

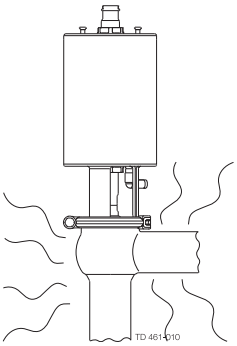

Burn hazard!

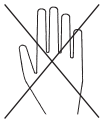

Step 3
Clean the plug and the seats correctly.
Pay special attention to the warnings.
Lift and lower valve plug momentarily!

Shut-off valve

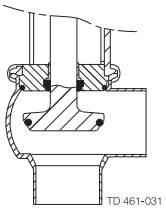

Change-over valve

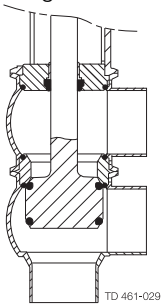

Step 4
Examples of cleaning agents:
Use clean water, free from chlorides.

1. 1% by weight NaOH at 70° C

1 kg NaOH	+	100 l water	=	Cleaning agent.
2.2 l 33% NaOH	+	100 l water	=	Cleaning agent.

2. 0.5% by weight HNO_3 at 70° C

0.7 l 53% HNO_3	+	100 l water	=	Cleaning agent.

Step 5
1. Avoid excessive concentration of the cleaning agent.
2. Adjust the cleaning flow to the process.
3. **Always** rinse well with clean water after the cleaning.

NOTE
The cleaning agents must be stored/disposed of in accordance with current regulations/directives.

Always rinse!

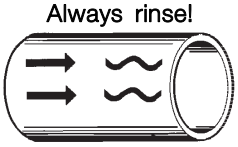

Clean water Cleaning agents

5 Maintenance

Service the valve regularly.
Study the instructions carefully and pay special attention to the warnings!
Always use Alfa Laval genuine spare parts. Always keep spare rubber seals and lip seals in stock.
Check the valve for smooth operation after servicing.

5.1 General maintenance

Step 1

- CAUTION
  Alfa Laval cannot be held responsible for incorrect installation.
- **Always** release compressed air after use.
- **Always** read the technical data thoroughly.
  See section 6 Technical data.
- **Always** use Alfa Laval genuine spare parts.
  The warranty of Alfa Laval products is dependent on use of Alfa Laval genuine spare parts.

Do **NOT** attempt to disassemble the actuator due to spring under load danger!

If marked with this warning, do **NOT** attempt to cut the actuator open, due to spring under load danger!

Step 2

Never service the valve when it is hot.

Never service the valve with valve and pipelines under pressure.

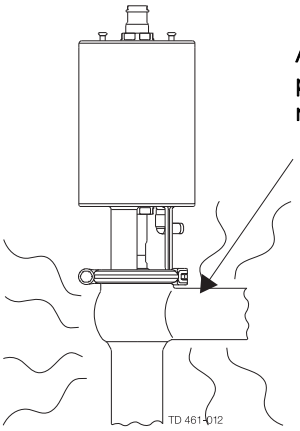

Step 3

Never stick your fingers through the valve ports if the actuator is supplied with compressed air.

Never touch the moving parts if the actuator is supplied with compressed air.

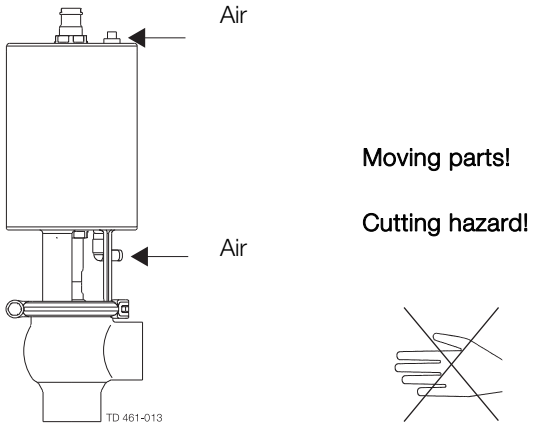

Service the valve regularly.
Study the instructions carefully and pay special attention to the warnings!
Always use Alfa Laval genuine spare parts. Always keep spare rubber seals and lip seals in stock.
Check the valve for smooth operation after servicing.

Below are some guidelines for maintenance and lubrication intervals. Please note that the guidelines are for normal working conditions in one shift.

	Product wetted seals	Actuator bushings complete
Preventive maintenance	**Replace after 12 months depending on working conditions**	**Replace after 5 years depending on working conditions**
Maintenance after leakage (leakage normally starts slowly)	**Replace at the end of the day**	**Replace when possible**
Planned maintenance	- Regular inspection for leakage and smooth operation - Keep a record of the valve - Use the statistics for planning of inspections **Replace after leakage**	- Regular inspection for leakage and smooth operation - Keep a record of the actuator - Use the statistics for planning of inspections **Replace after leakage**
Lubrication	**Before fitting** Klüber Paraliq GTE 703 or similar USDA H1 approved oil/grease	**Before fitting** Molykote Longterm 2 plus

Pre-use check:

1. Supply compressed air to the actuator.
2. Open and close the valve several times to ensure that it operates smoothly.
   Pay special attention to the warnings!

Open/close!

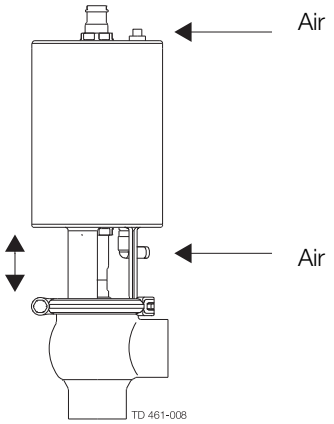

Recommended spare parts
Service kits (see section 7 Parts list and Service Kits)

5 Maintenance

Study the instructions carefully. The items refer to the parts list and service kits section. Handle scrap correctly.
NC = Normally closed.
NO = Normally open.
A/A = Air/air activated.

5.2 Dismantling the valve

If the actuator is marked with a danger warning, do **NOT** attempt to cut the actuator open.

Do **NOT** attempt to disassemble the actuator due to spring under load danger!

Do **NOT** attempt to cut the actuator open due to spring under load danger!

Step 1

1a
Shut-off valve:
1. Supply compressed air to the actuator (only NC).
2. Loosen and remove clamp.
3. Release compressed air (only NC).
4. Lift away the actuator.
5. Unscrew and remove valve plug.
6. Remove O-ring, lip seal and bushing in bonnet. (Use bushing tool and rubber mallet).
7. Loosen and remove lower clamp.
8. Remove valve body.
9. Remove O-ring in port seal element.

Note! Be careful not to damage the bushing.

Pay special attention to the warnings!

Note! For plug seal replacement please see section 5.3 Plug seal replacement.

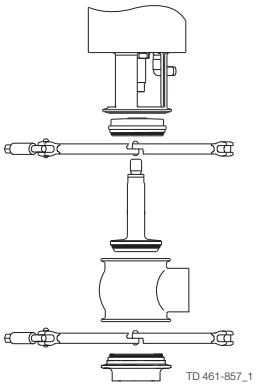

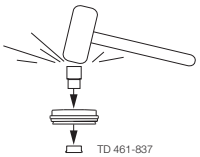

Note!
Be careful not to damage the bushing.

1b
Change-over valve:
1. Supply compressed air to the actuator (only NC).
2. Loosen and remove middle clamp.
3. Release compressed air (only NC).
4. Lift away the actuator and upper valve body.
5. Supply compressed air to the actuator (only NO).
6. Unscrew and remove valve plug.
7. Release compressed air (only NO).
8. Remove seat and O-rings.
9. Loosen and remove upper clamp.
10. Remove upper valve body.
11. Remove O-ring, lip seal and bushing in bonnet. (Use bushing tool and rubber mallet. See drawing, step 1a).
12. Loosen and remove lower clamp.
13. Remove valve body.
14. Remove O-ring in port seal element.

Note! Be careful not to damage the bushing.

Pay special attention to the warnings!

Note! For plug seal replacement please see section 5.3 Plug seal replacement.

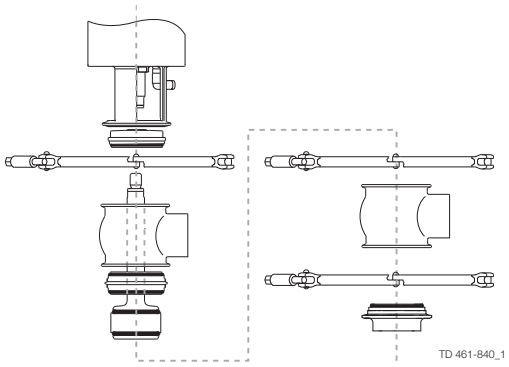

Study the instructions carefully. The items refer to the parts list and service kits section. Handle scrap correctly.
NC = Normally closed.
NO = Normally open.
A/A = Air/air activated.

5.3 Plug seal replacement

Step 1

1. Remove old seal ring using a knife, screwdriver or similar.
   Be careful not to damage the plug surface.
   If using a screwdriver it must be placed underneath the plug groove (see drawing 1).
2. Grease the new seal ring with Paralique GTE 703, which is included in the service kit.
   Only use a very small amount of grease.
3. Fit the seal ring on the plug without pressing it into the groove.
   Be careful not to twist the seal ring.
   Use a screwdriver (two turns) to fit the seal ring properly and to ensure it is not twisted (see drawing 2).
4. The seal ring can now be mounted by hand or with the Alfa Laval plug tool.

Drawing 1

It is important to place the screwdriver underneath the plug.

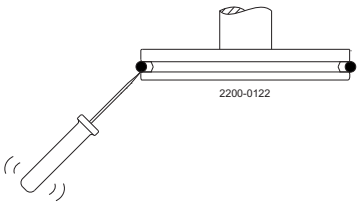

Drawing 2

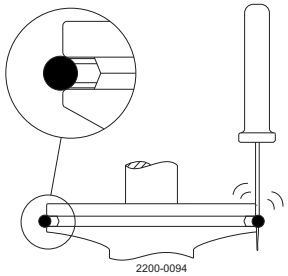

5 Maintenance

Study the instructions carefully. The items refer to the parts list and service kits section. Handle scrap correctly.
NC = Normally closed.
NO = Normally open.
A/A = Air/air activated.

Step 2

1. Check the seal ring is premounted as described in step 1.
   To ensure correct mounting, press with your thumb on the seal ring, which must be done approximately 10 times and always with opposite pressure points, from A to B, to C and D (see drawing 3).
   The rest of the seal ring can now be pressed into the groove so the whole seal ring is mounted. Check that there are NO "bulge" (see drawing 4).
   If there is a little bulge – then use the screwdriver to eliminate the bulge.
   Again press with the thumb on the seal ring and keep the pressure while rotating 360° (see drawing 3).
2. It is important to release compressed air behind the seal ring. This is done with a screwdriver and always underneath the plug as shown.
   It must be done at one or two different points on the circumference.
   Be careful not to make marks on the surface of the plug and seal ring (see drawing 5).

Drawing 3

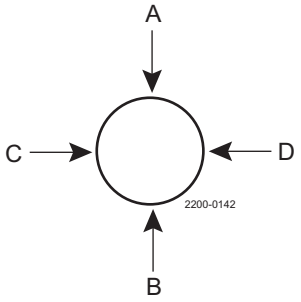

Drawing 4

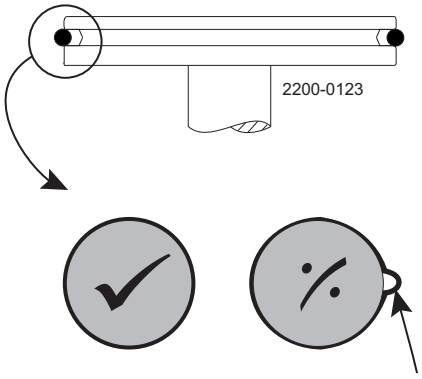

Drawing 5

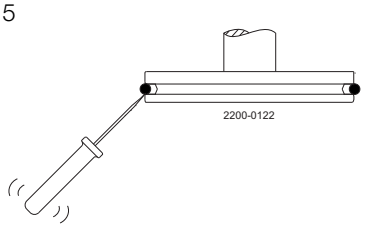

Study the instructions carefully. The items refer to the parts list and service kits section. Handle scrap correctly.
NC = Normally closed.
NO = Normally open.
A/A = Air/air activated.

Step 3
Mounting plug seal ring with Alfa Laval plug seal tool

Mounting tool for elastomer plug seals	DN40 38 mm	DN50 - DN65 51 mm - 63.5 mm	DN80 - DN100 76.1 mm - 101.6 mm
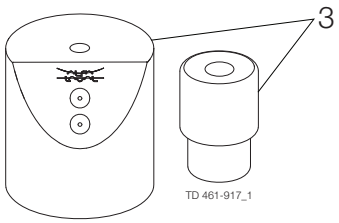	9613172901	9613172902	9613172903

1. Part B
   “Part B” has a small and a large diameter as the tool can be used for two plug sizes – e.g. plug tool = 9613172902 can be used for DN50/ISO51 (small) and DN65/ISO63 (large).
   “Part B” therefore has to be turned so it matches the plug size diameter.
2. Part A
   “Part A” has an upper and lower exhaust hole, as the tool can be used for two plug sizes – e.g. plug tool = 9613172902.
   The upper exhaust hole is for the small plug size e.g. DN50/ISO51 (small) and the lower exhaust hole is for DN65/ISO63 (large).
   When using a “change-over plug” the ø20 spindle must also be fitted in “part A” and “part B” (see drawing 2).
   When using a “reverse acting plug” the ø20 spindle must only be fitted in “part A” (see drawing 2).
   When using a “standard shut-off plug” the ø20 spindle is only fitted in “part B” (see drawing 1).
3. Fit the plug spindle in “part B” or “part A”.
   Place “part A” onto “part B” and then press “hard” down on top of “part A”.
   Now fit the screwdriver into the exhaust hole and underneath the plug groove meanwhile keeping the pressure on “part A”. This should ensure correct removal of air behind the seal ring. Normally the sound “Psst” can be heard one time (see drawing 3).
   A “drill press” can of course also be used to press down on “part A”.
4. It is important to release compressed air behind the seal ring. This is done with a screwdriver and always underneath the plug as shown (see drawing 4).

Exhaust holes for screwdriver

ø20 hole for plug spindle

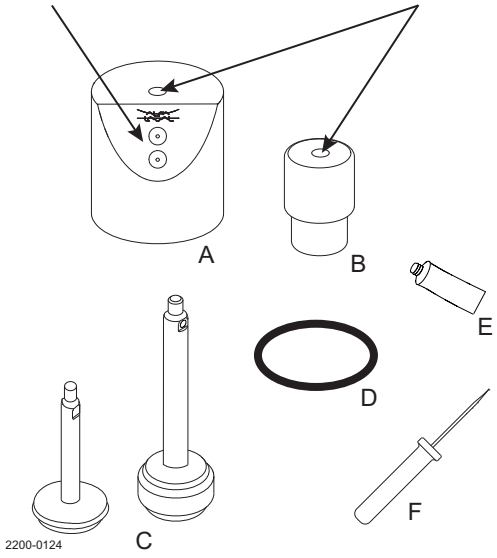

A. Part A
B. Part B
C. Plugs
D. O-ring
E. Grease Paralique GTE703 from service kit
F. Screwdriver (no sharp corner)

5 Maintenance

Study the instructions carefully. The items refer to the parts list and service kits section. Handle scrap correctly.
NC = Normally closed.
NO = Normally open.
A/A = Air/air activated.

Drawing 1

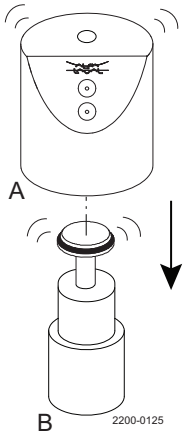

Drawing 2

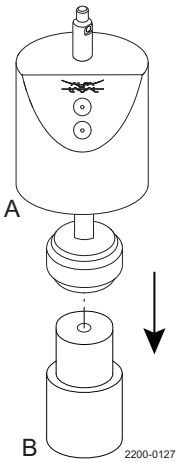

Drawing 3

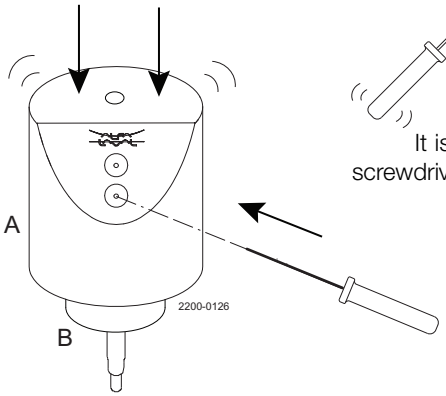

Drawing 4

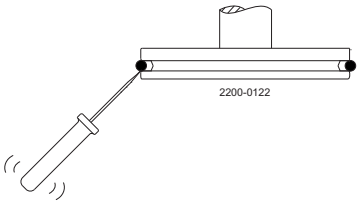

It is important to place the screwdriver underneath the plug.

5.4 Valve assembly

Reverse order of 4.2, Dismantling of valve.
Lubricate O-ring (21) and lip seal (25) with Klüber Paraliq GTE 703.
Remember to tighten spindle and plug with a torque M = **30Nm** (Use two 17mm spanners)
If there are vibrations in the pipeline Alfa Laval recommend to use loctite no. 243.
The clamps thread must be lubricated before tightening - max. torque for the clamps is 10-12 Nm

Pay special attention to the warnings.

Study the instructions carefully.
The items refer to the parts list and service kits section. Handle scrap correctly.
A/A = Air/air activated.
Service tool: See Spare Parts.

5.5 Actuator types

Different actuator types for the SSV valve
In June 2016 the below change was implemented and the “removable yoke with bolts” version is thereby phased out and replaced by the “yoke without bolts” version.

NOTE
It is important to check for warnings marked on the actuator when servicing an actuator - see below table.

Actuator type	**Non-maintainable actuator** Spring under load and **CANNOT** be opened 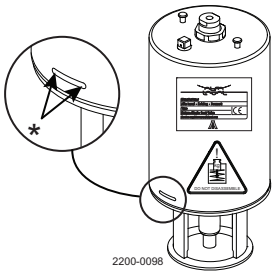 *) Lock wire opening is locked, when warning is marked on actuator	**Fully maintainable actuator** Spring cage and can be opened 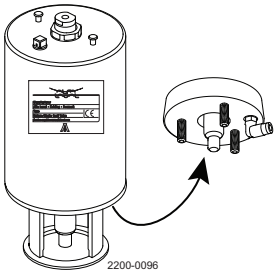 	**Fully maintainable actuator** Spring cage and can be opened
Yoke type	Non-removable yoke	“Removable yoke with bolts”. If the yoke with bolts is damaged it has to be replaced by the “yoke without bolts”	“Yoke without bolts”
Service	Not possible to service internally (it is not possible to change piston O-rings)	Yes	Yes
Marked with warnings	Yes	No	No
Year of production	From 2006	From 2006 to June 2016	From June 2016

5 Maintenance

Study the instructions carefully.
The items refer to the parts list and service kits section. Handle scrap correctly.
A/A = Air/air activated.
Service tool: see spare parts.

5.6 Actuator bushing replacement (non-maintainable actuator)

If the actuator is marked with a danger warning, do **NOT** attempt to cut the actuator open.

Do **NOT** attempt to disassemble the actuator due to spring under load danger!

Do **NOT** attempt to cut the actuator open due to spring under load danger!

Step 1
Introduction
- The actuator service kit contains two bushings and four O-rings.
- Mount the thick O-ring inside and the thin O-ring outside the bushing.
- Always lubricate the spindle and O-rings thoroughly with “Molykote Longterm 2 Plus” before mounting the new bushings.

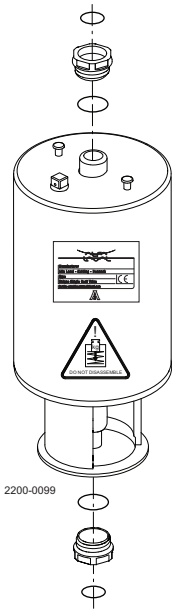

Study the instructions carefully.
The items refer to the parts list and service kits section. Handle scrap correctly.
A/A = Air/air activated.
Service tool: see spare parts.

Step 2
Introduction - Standard socket wrench
Use a 27 mm socket wrench to mount the bushings, as the space in the yoke is limited.
A socket wrench 24x27 (length = 185 mm) is a standard tool, which can be purchased from all tool shops.

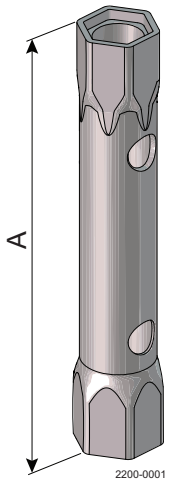

A = 185 mm

Example:
Socket wrench - 24x27 mm
Supplier: Gedore Tool
EAN4010886621264

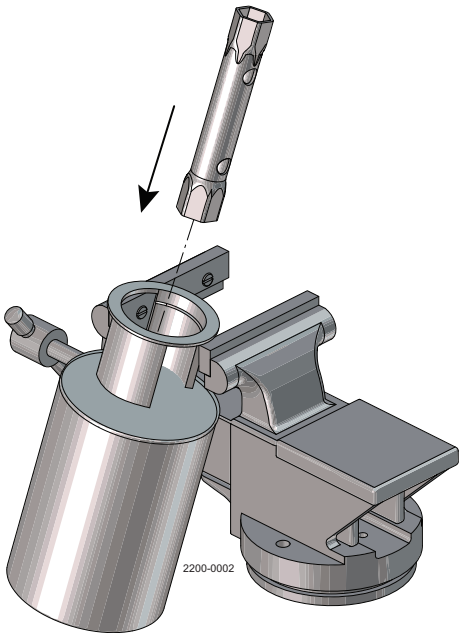

5 Maintenance

Study the instructions carefully.
The items refer to the parts list and service kits section. Handle scrap correctly.
A/A = Air/air activated.
Service tool: see spare parts.

Step 3
Introduction - Aligning spindle
The actuator spindle can in some cases be forced off centre by the internal spring, see drawing below.
In these cases, the alignment spindle shown below, together with the socket wrench, is a great help and ensures a reliable mounting of the bushing. The spindle can either be purchased from Alfa Laval together with the socket wrench (9614-1984-01) or it can be manufactured locally using the below dimensions.

Spindle forced off centre by spring inside actuator

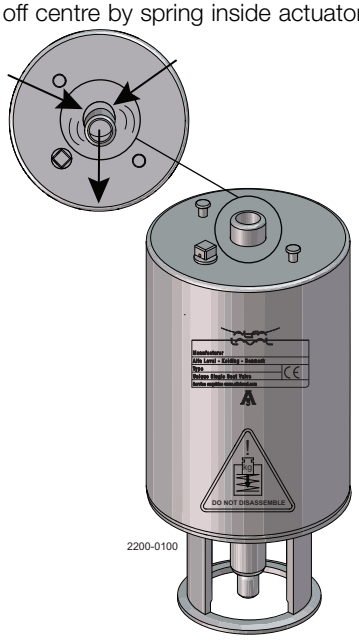

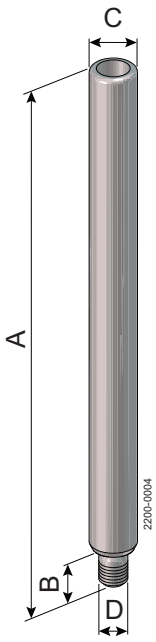

A = 280 mm
B = 16 mm
C = Rod ø20 mm
D = M12 x 1.5

Step 4
The actuator must be carefully fixed in a vice if it is dismounted from the valve. Be careful not to press the yoke flange oval when fixing the actuator in the vice. Only fix carefully on the “yoke leg” as shown below.

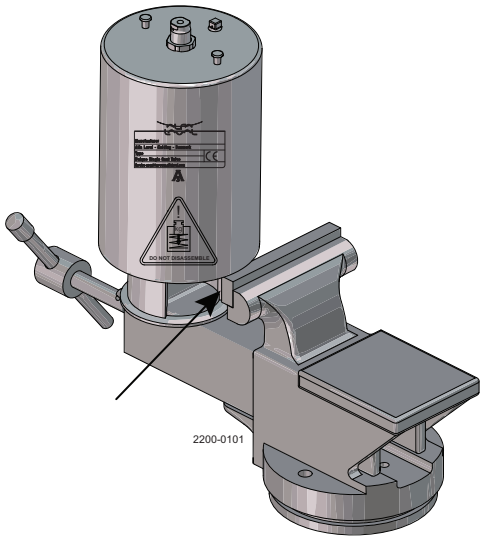

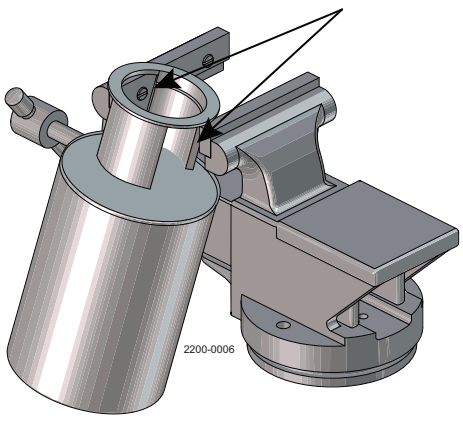

Study the instructions carefully.
The items refer to the parts list and service kits section. Handle scrap correctly.
A/A = Air/air activated.
Service tool: see spare parts.

Step 5
Remove adapter screw.
(After spindle alignment the adapter screw has to be remounted.)

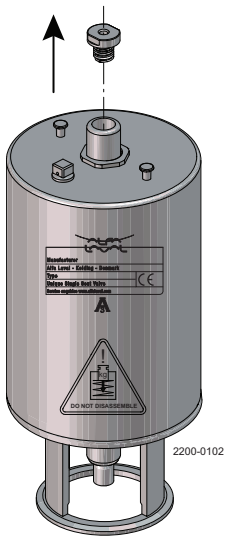

Step 6
1. Lubricate thoroughly both the actuator spindle and O-rings.
2. Grease with “Molykote Longterm 2 plus”.
3. Fit the **bushing** on the spindle.

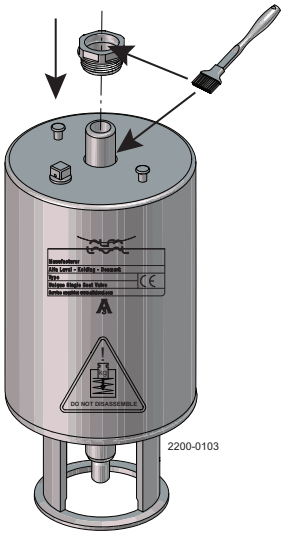

5 Maintenance

Study the instructions carefully.
The items refer to the parts list and service kits section. Handle scrap correctly.
A/A = Air/air activated.
Service tool: see spare parts.

Step 7
Fit the aligning spindle to the actuator spindle, and then mount the socket wrench.

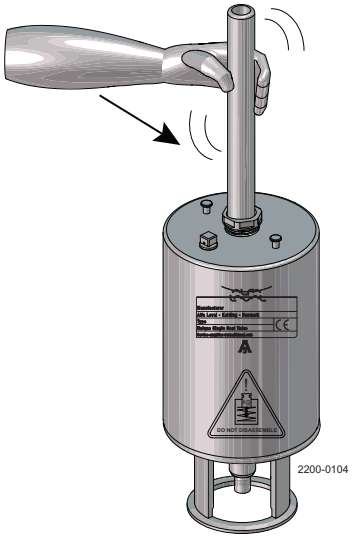

Aligning spindle

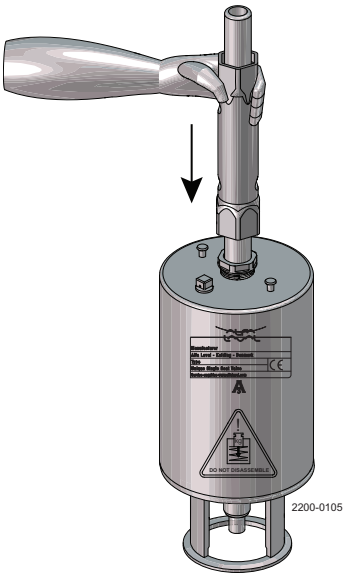

Socket wrench

Step 8
Now pull the aligning spindle to centre the actuator spindle. In this position rotate the **bushing** 180° backwards and then begin to fasten the bushing. Make sure that the thread catches evenly! The bushing must only be tightened with a torque of 10 Nm (7 lb-ft) which can be done by turning “hard” by hand.

Study the instructions carefully.
The items refer to the parts list and service kits section. Handle scrap correctly.
A/A = Air/air activated.
Service tool: see spare parts.

5.7 Dismantling of fully maintainable actuator (removable yoke with bolts/2006-June 2016)

If the actuator is marked with a danger warning, do **NOT** attempt to cut the actuator open.
See also section 5.5 Actuator types

Do **NOT** attempt to disassemble the actuator due to spring under load danger!

Do **NOT** attempt to cut the actuator open due to spring under load danger!

Before dismantling check that the actuator is not marked with a warning.

1. Rotate cylinder.
2. Remove lock wire and pull away cylinder.
3. Unscrew nuts and remove yoke.
4. Top and bottom bushings.
5. Remove piston with O-ring and spring assembly.
6. Remove O-rings and support disc.

Rotate cylinder with service tool.

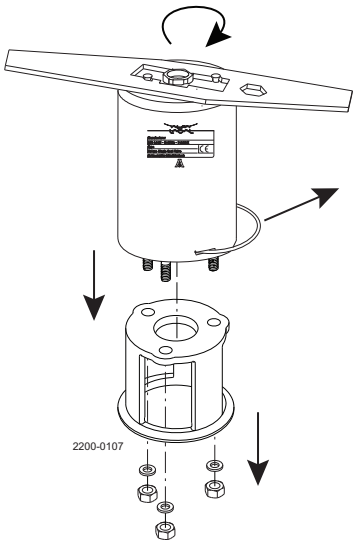

Note! The A/A actuator has no spring assembly.

5 Maintenance

Study the instructions carefully.
The items refer to the parts list and service kits section. Handle scrap correctly.
A/A = Air/air activated.
Service tool: see spare parts.

5.8 Dismantling of fully maintainable actuator (yoke without bolts/June 2016 ->)

If the actuator is marked with a danger warning, do **NOT** attempt to cut the actuator open.
See also section 5.5 Actuator types

Do **NOT** attempt to disassemble the actuator due to spring under load danger!

Do **NOT** attempt to cut the actuator open due to spring under load danger!

Before dismantling check that the actuator is not marked with a warning.

1. Rotate cylinder.
2. Remove lock wire and pull away cylinder.
3. Top and bottom bushings.
4. Remove piston with O-ring and spring assembly.

Rotate cylinder with service tool.

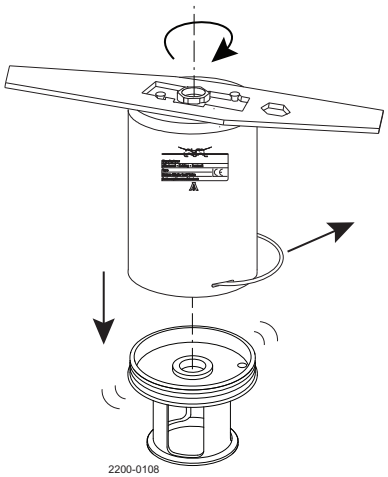

Note! The A/A actuator has no spring assembly.

5.9 Mounting of fully maintainable actuator

Depending on type of actuator choose step 1 or step 2.

Step 1
Reverse order of 5.7 Dismantling of fully maintainable actuator (removable yoke with bolts/2006-June 2016)
Tighten nuts to a torque of 17 Nm.
Lubricate O-rings (3, 7, 11) with Molykote Longterm 2 plus before fitting.
Tighten bushings with a torque = 10 Nm and be careful not to overtighten. See also section 5.6 Actuator bushing replacement (non-maintainable actuator)

Step 2
Reverse order of 5.8 Dismantling of fully maintainable actuator (yoke without bolts/June 2016 ->)
Lubricate O-rings (3, 7, 11) with Molykote Longterm 2 plus before fitting.
Tighten bushings with a torque = 10 Nm and be careful not to overtighten. See also section 5.6 Actuator bushing replacement (non-maintainable actuator)

Study the instructions carefully.
The items refer to the parts list and service kits section. Handle scrap correctly.
A/A = Air/air activated.
Service tool: see spare parts.

5.10 Changing pneumatic movement on fully maintainable actuator (NC/NO)

If the actuator is marked with a danger warning, do NOT attempt to cut the actuator open.
See also section 5.5 Actuator types.

Do NOT attempt to disassemble the actuator due to spring under load danger!

Do NOT attempt to cut the actuator open due to spring under load danger!

Before dismantling check that the actuator is not marked with a warning.

1. Rotate cylinder.
2. Remove lock wire and pull away cylinder.
3. Reverse piston and spring assembly.
4. Reverse adapter, air fitting and plug to opposite end.
5. Reassemble in reverse order (3 to 1).

NOTE
The A/A actuator has no spring assembly

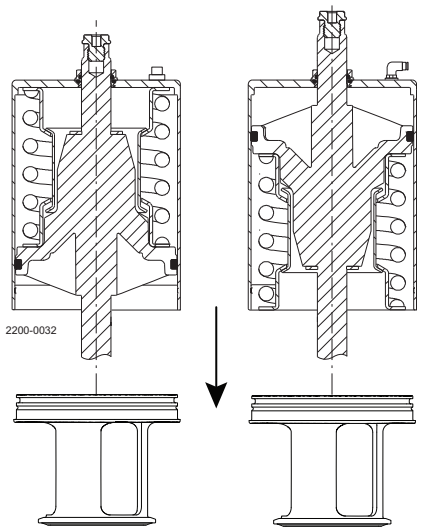

Pneumatic movement upwards

Pneumatic movement downwards

6 Technical data

It is important to observe the technical data during installation, operation and maintenance.
Inform the personnel about the technical data.

6.1 Technical data

The valve is a pneumatic seat valve in a hygienic and modular design for a wide field of duties, e.g. as a shut-off valve with two (2) or three (3) ports or as a change-over valve with three (3) to five (5) ports. The valve is remote-controlled by means of compressed air. It has few and simple moveable parts which results in a very reliable valve and low maintenance cost.

Data - valve/actuator	
Max. product pressure	1000 kPa (10 bar).
Min. product pressure	Full vacuum (depending on product specifications).
Temperature range	-10° C to +140° C (standard EPDM seal).
Air pressure, actuator	500 to 700 kPa (5 to 7 bar).
Materials - valve/actuator	
Product wetted steel parts	1.4404 (316L) (internal Ra < 0.8 µm).
Other steel parts	1.4301 (304).
Plug seal	EPDM / PTFE (TR2).
Other product wetted seals	EPDM (standard).
Optional product wetted seals	HNBR and FPM.
Other seals	NBR.

Weight (kg)

Nominal size	Inch tubes DN/OD			
	51	63.5	76.1	101.6
Shut-off valve	6	6.5	11.5	16
Change-over valve	7.5	8.5	16.5	18.5
Shut-off valve: High pressure	10.5	11	12	14
Change-over valve: High pressure	12	13	15	19

Noise
One metre away from and 1.6 metres above the exhaust, the noise level of a valve actuator will be approximately 77db (A) without noise damper and approximately 72 db (A) with damper - measured at 7 bar air-pressure.

The drawing shows Unique Single Seat Valve - Tangential.
The items refer to the parts lists in the following sections
Always use Alfa Laval genuine spare parts. The warranty of Alfa Laval products is dependent on the use of Alfa Laval genuine spare parts.

7.1 Drawing

If the actuator is marked with a danger warning, do NOT attempt to cut the actuator open.
See also section 5.5 Actuator types

Do NOT attempt to disassemble the actuator due to spring under load danger!

Do NOT attempt to cut the actuator open due to spring under load danger!

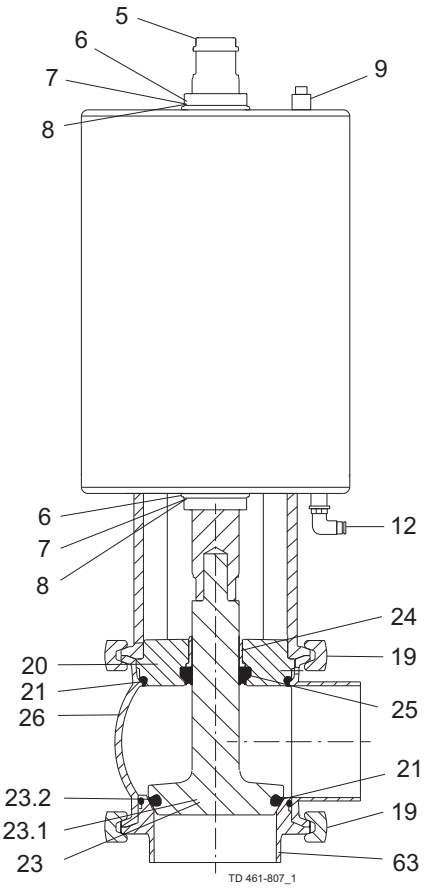

Shut-off valve

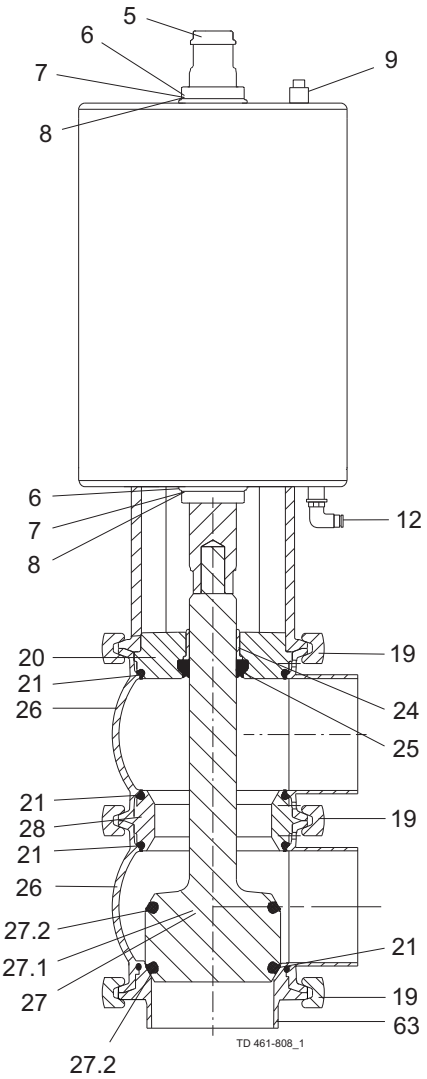

Change-over valve

7 Parts list and Service Kits

The drawing shows Unique Single Seat Valve - Tangential.
The items refer to the parts lists in the following sections
Always use Alfa Laval genuine spare parts. The warranty of Alfa Laval products is dependent on the use of Alfa Laval genuine spare parts.

7.2 Unique SSV - Tangential - Shut off Valve

If the actuator is marked with a danger warning do **NOT** attempt to cut the actuator open.

Do **NOT** attempt to disassemble the actuator due to spring under load danger!

Do **NOT** attempt to cut the actuator open, due to spring under load danger!

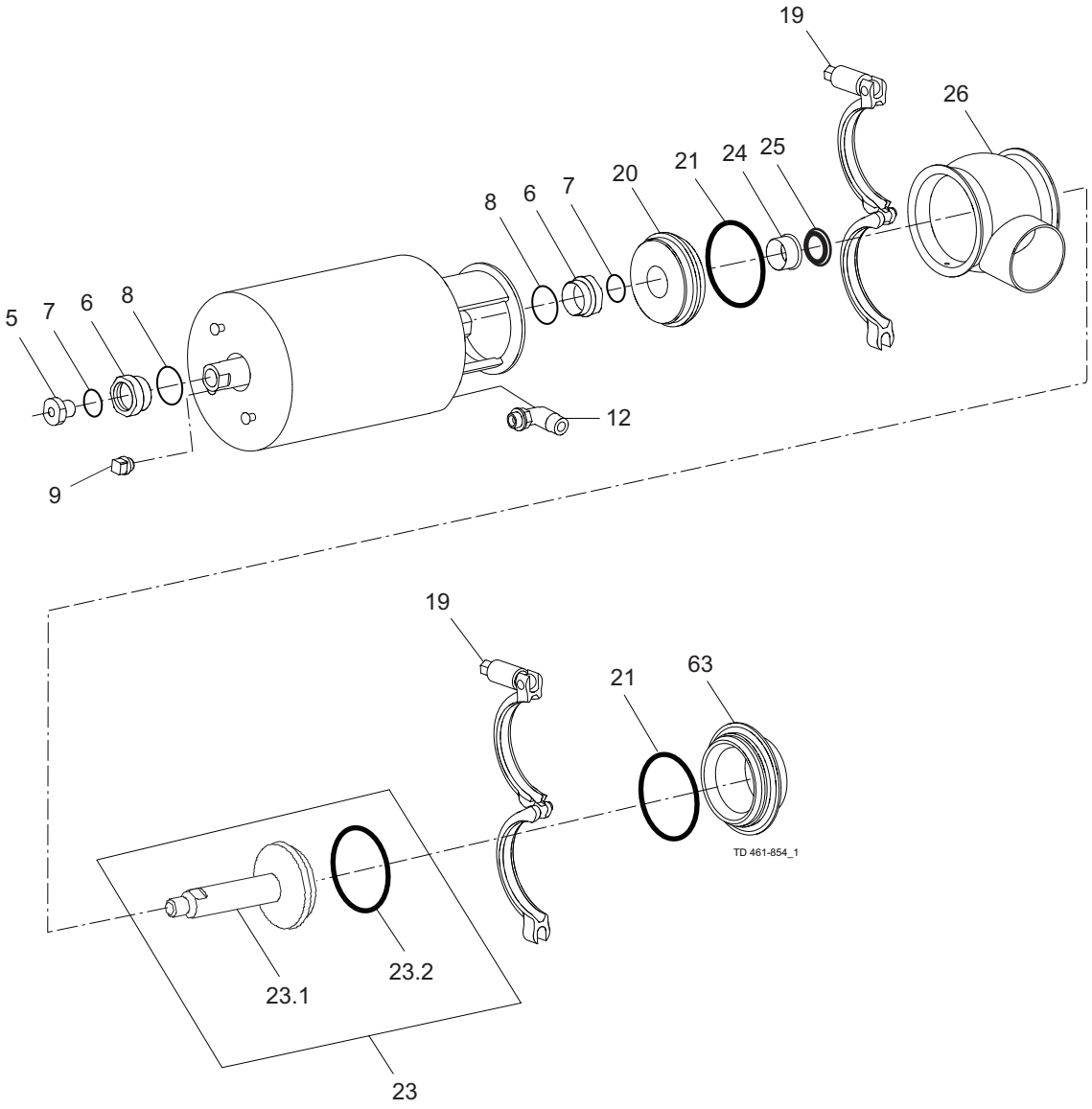

7 Parts list and Service Kits

The drawing shows Unique Single Seat Valve - Tangential.
The items refer to the parts lists in the following sections
Always use Alfa Laval genuine spare parts. The warranty of Alfa Laval products is dependent on the use of Alfa Laval genuine spare parts.

Parts list

Pos.		Qty	Denomination
			Actuator
5		1	Adapter
6	□	2	Bushing
7	□	2	O-ring
8	□	2	O-ring
9		1	Plug
12		1(2)	Air fitting
19		2	Clamp
20		1	Bonnet
21	♦	2	O-ring
23		1	Plug
23.1		1	Plug, shut-off
23.2	♦	1	Plug seal
24		1	Bushing
25	♦	1	Lip seal
26		1	Valve body
63		1	Port seal element, welding ends

Service kits

	Denomination	51 mm	63.5 mm	76.1 mm	101.6 mm
Service kit for actuator					
□	Service kit	9611926500	9611926500	9611926500	9611926500
Service kit for product wetted parts, standard					
♦	Service kit, EPDM	9611926743	9611926744	9611926745	9611926746
♦	Service kit, HNBR	9611926747	9611926748	9611926749	9611926750
♦	Service kit, FPM	9611926751	9611926752	9611926753	9611926754

Parts marked with □♦ are included in the service kits.
Recommended spare parts: Service kits.

TD 900-483/2

7 Parts list and Service Kits

The drawing shows Unique Single Seat Valve - Tangential.
The items refer to the parts lists in the following sections
Always use Alfa Laval genuine spare parts. The warranty of Alfa Laval products is dependent on the use of Alfa Laval genuine spare parts.

7.3 Unique SSV - Tangential - Change Over Valve

If the actuator is marked with a danger warning do **NOT** attempt to cut the actuator open.

Do **NOT** attempt to disassemble the actuator due to spring under load danger!

Do **NOT** attempt to cut the actuator open, due to spring under load danger!

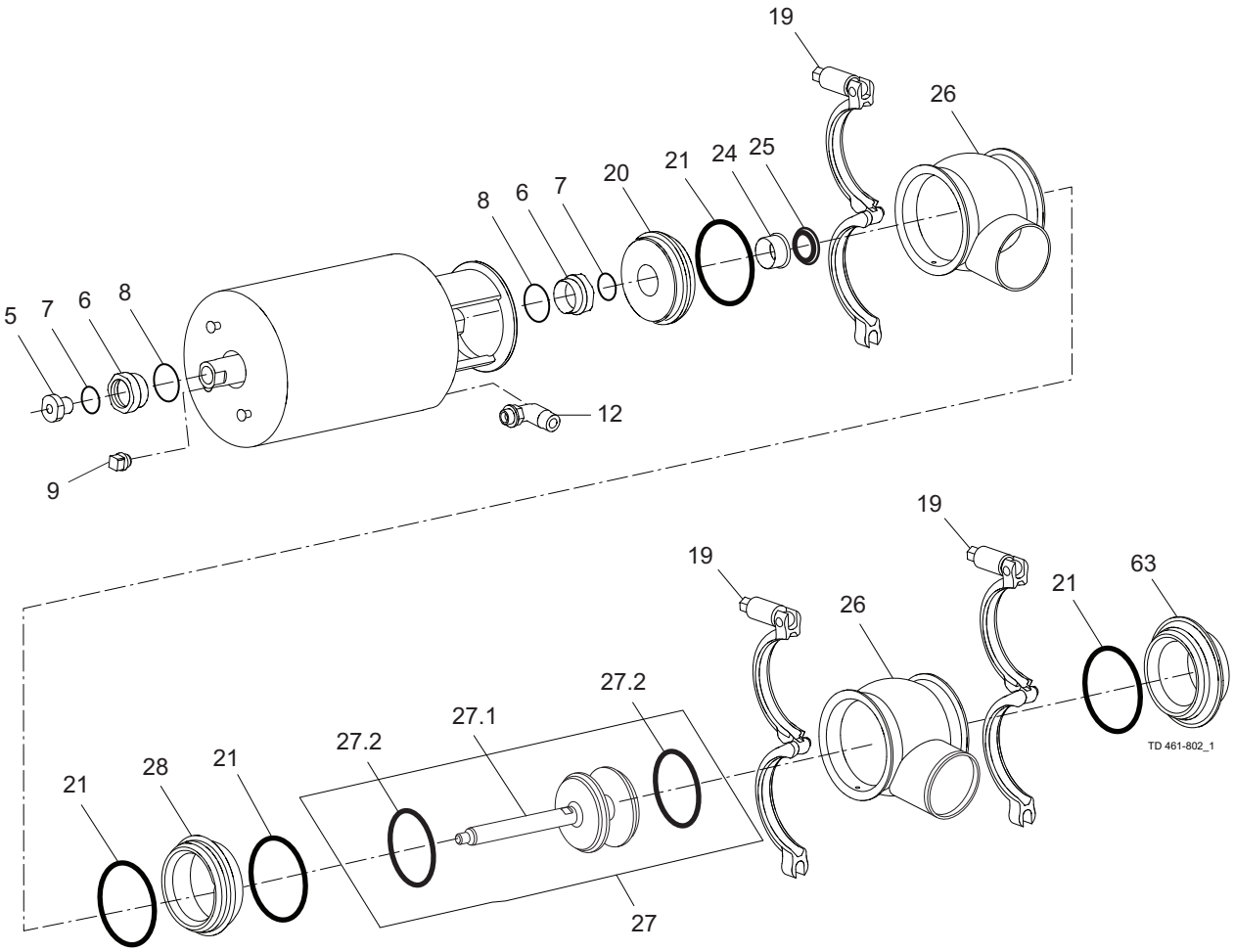

The drawing shows Unique Single Seat Valve - Tangential.
The items refer to the parts lists in the following sections
Always use Alfa Laval genuine spare parts. The warranty of Alfa Laval products is dependent on the use of Alfa Laval genuine spare parts.

Parts list

Pos.		Qty	Denomination
			Actuator
5		1	Adapter
6	□	2	Bushing
7	□	2	O-ring
8	□	2	O-ring
9		1	Plug
12		1(2)	Air fitting
19		3	Clamp
20		1	Bonnet
21	♦	4	O-ring
24		1	Bushing
25	♦	1	Lip seal
26		1	Valve body
27		1	Plug
27.1		1	Plug, change-over
27.2	♦	2	Plug seal
28		1	Seat
63		1	Port seal element, welding ends

Service kits

	Denomination	51 mm	63.5 mm	76.1 mm	101.6 mm
Service kit for Actuator					
□	Service kit, actuator	9611926500	9611926500	9611926500	9611926500
Service kit for Product wetted parts, standard					
♦	Service kit, EPDM	9611926755	9611926756	9611926757	9611926758
♦	Service kit, HNBR	9611926759	9611926760	9611926761	9611926762
♦	Service kit, FPM	9611926763	9611926764	9611926765	9611926766

Parts marked with □♦ are included in the service kits.
Recommended spare parts: Service kits.

TD 900-483/2

7 Parts list and Service Kits

The drawing shows Unique Single Seat Valve - Tangential.
The items refer to the parts lists in the following sections
Always use Alfa Laval genuine spare parts. The warranty of Alfa Laval products is dependent on the use of Alfa Laval genuine spare parts.

7.4 Maintainable actuator

If the actuator is marked with a danger warning do **NOT** attempt to cut the actuator open.

Do **NOT** attempt to disassemble the actuator due to spring under load danger!

Do **NOT** attempt to cut the actuator open, due to spring under load danger!

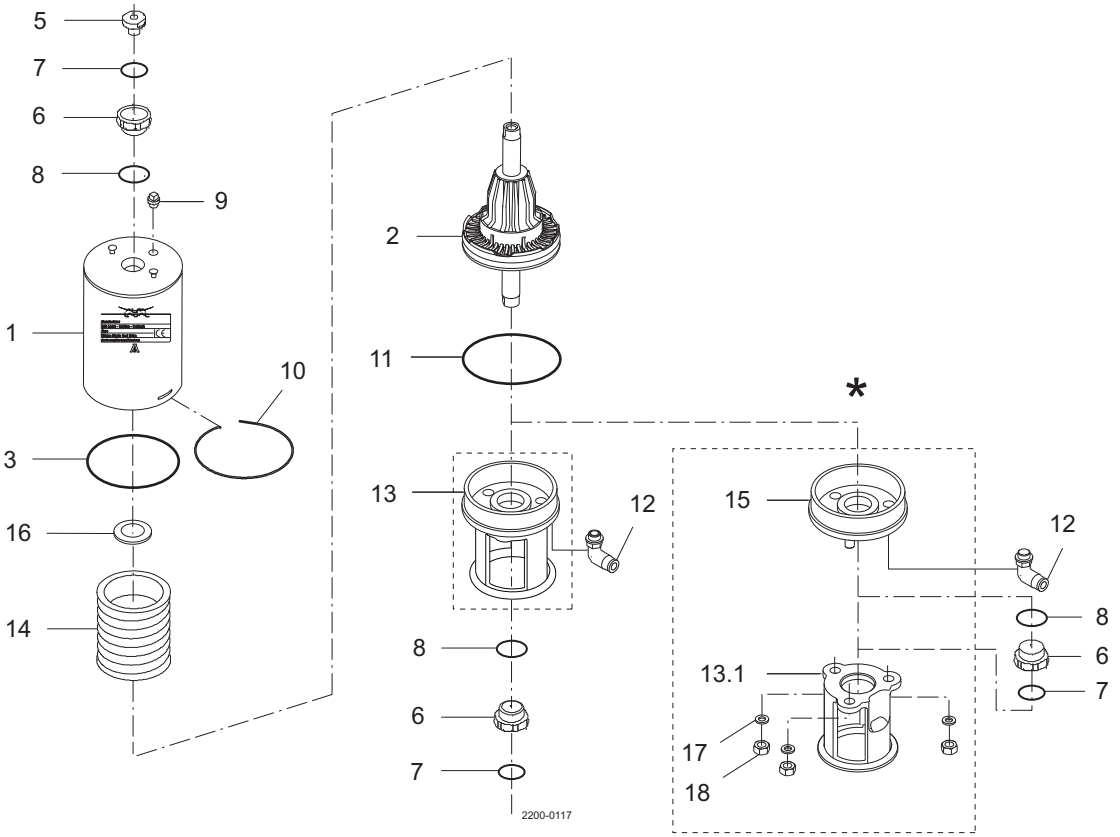

*) "Removable yoke with bolts" version, produced from 2006 to June 2016.
Replaced by "yoke without bolts" (13)

7 Parts list and Service Kits

The drawing shows Unique Single Seat Valve - Tangential.
The items refer to the parts lists in the following sections
Always use Alfa Laval genuine spare parts. The warranty of Alfa Laval products is dependent on the use of Alfa Laval genuine spare parts.

Parts list

Pos.		Qty	Denomination
1		1	Cylinder
2		1	Piston
3	□♦	1	O-ring
5		1	Adapter
6	□♦	2	Bushing
7	□♦	2	O-ring
8	□♦	2	O-ring
9		1	Plug
10		1	Lock wire
11	□♦	1	O-ring
12		1(2)	Air fitting (only 2 for A/A)
13		1	Yoke without bolts
13.1		1	Yoke (-> 0616)
14		1	Spring assembly
15		1	Bottom (-> 0616)
16	□♦	1(2)	Support disc (only 2 for A/A)
17		3	Washer (-> 0616)
18		3	Nut (-> 0616)

Service kits

	Denomination	DN 25 25 mm	DN 40 38 mm	DN 50 51 mm	DN 65 63.5 mm	DN 80 76.1 mm	DN 100 101.6 mm
Service kits							
□	Service kit, NO , NC	9611926497	9611926497	9611926498	9611926498	9611926499	9611926499
♦	Service kit, A/A	9611926519	9611926519	9611926520	9611926520	9611926521	9611926521

How to contact Alfa Laval
Contact details for all countries are
continually updated on our website.
Please visit www.alfalaval.com to access the information directly.

© Alfa Laval Corporate AB
This document and its contents is owned by Alfa Laval Corporate AB and protected by laws governing intellectual property and thereto related rights. It is the responsibility of the user of this document to comply with all applicable intellectual property laws. Without limiting any rights related to this document, no part of this document may be copied, reproduced or transmitted in any form or by any means (electronic, mechanical, photocopying, recording, or otherwise), or for any purpose, without the expressed permission of Alfa Laval Corporate AB. Alfa Laval Corporate AB will enforce its rights related to this document to the fullest extent of the law, including the seeking of criminal prosecution.