Instruction Manual

LKH Prime UltraPure Pump

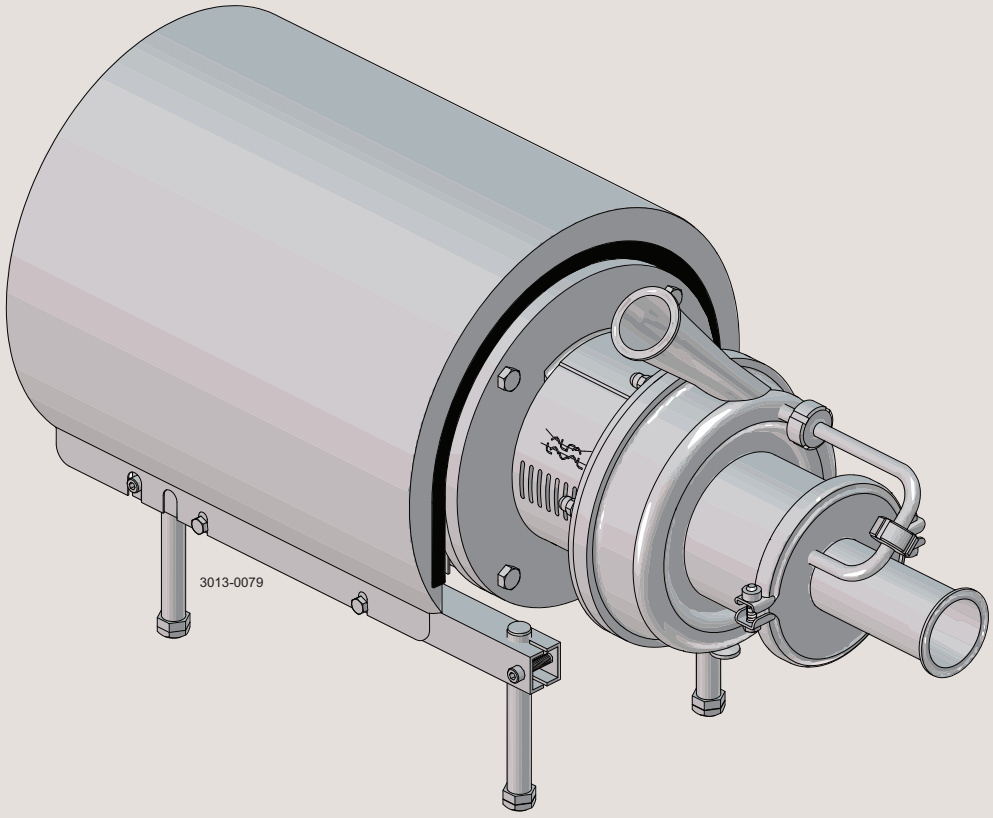

ESE03177-EN2 2017-01

Original manual

Table of contents

The information herein is correct at the time of issue but may be subject to change without prior notice

1. EC Declaration of Conformity 4

2. Safety 5
2.1. Important information 5
2.2. Warning signs 5
2.3. Safety precautions 6

3. Installation 7
3.1. Unpacking/delivery 7
3.2. Installation 8
3.3. Pre-check 11
3.4. Recycling information 13

4. Operation 14
4.1. Operation/control 14
4.2. Trouble shooting 16
4.3. Recommended cleaning 17

5. Maintenance 19
5.1. General maintemance 19
5.2. Cleaning procedure 21
5.3. Dismantling of pump/shaft seals 22
5.4. Assembly of pump/single shaft seal 26
5.5. Assembly of pump/double mecanical shaft seal 29
5.6. Adjustment of shaft 32

6. Technical data 34
6.1. Technical data 34
6.2. Relubrication intervals 35
6.3. Torque specifications 38
6.4. Weight (kg) 38
6.5. Noise emission 39

7. Part list and service kits 41
7.1. LKH Prime UltraPure 41
7.2. LKH Prime UltraPure 20 - Product wetted parts 42
7.3. LKH Prime UltraPure 20 - Motor-dependent parts 44
7.4. LKH Prime UltraPure 20 - Shaft seal 46

1 EC Declaration of Conformity

Revision of Declaration of Conformity 2009-12-29

The Designated Company

Alfa Laval Kolding A/S

Company Name

Albuen 31, DK-6000 Kolding, Denmark

Address

+45 79 32 22 00

Phone No.

hereby declares that

Pump

Designation

LKH Prime UltraPure 20

Type

from serial number 10.000 to 1.000.000

is in conformity with the following directive with amendments:
- Machinery Directive 2006/42/EC

The person authorised to compile the technical file is the signer of this document

Global Product Quality Manager Pump, Valves, Fittings and Tank Equipment	Lars Kruse Andersen
Title	Name
Kolding	2016-02-01
Place	Date

Signature

2 Safety

This manual highlights unsafe practices and other important information.
Warnings are emphasised by means of special signs.
Always read the manual before using the pump!

2.1 Important information

WARNING
Indicates that special procedures must be followed to avoid serious personal injury.

CAUTION
Indicates that special procedures must be followed to avoid damage to the pump.

NOTE
Indicates important information to simplify or clarify procedures.

2.2 Warning signs

General warning:

Dangerous electrical voltage:

Caustic agents:

2 Safety

All warnings in the manual are summarised on this page.
Pay special attention to the instructions below in order to avoid severe personal injury and/or damage to the pump.

2.3 Safety precautions

Installation:

Always read the technical data carefully. (See chapter 6.1 Technical data)
Always use a lifting crane when handling the pump.
Always remove the air screw and impeller before checking the direction of rotation.

Never start the pump if the impeller and air screw are fitted and the pump casing is removed.

Operation:

Always read the technical data carefully. (See chapter 6.1 Technical data)
Never touch the pump or the pipelines when pumping hot liquids or when sterilising.
Never run the pump when both the suction side and the pressure side are blocked.
Never run the pump when partially installed or not fully assembled.
Necessary precautions must be taken if leakage occurs as this can lead to hazardous situations.

Always handle lye and acid with great care.
Never use the pump for products not listed in the Alfa Laval pump selection program.
The Alfa Laval pump selection program can be acquired from your local Alfa Laval sales company.

Maintenance:

Always read the technical data carefully. (See chapter 6.1 Technical data)
Never service the pump when it is hot.
Never service the pump if pressurised.
Always use genuine spare parts from Alfa Laval.

Motors with grease nipples:
Remember to perform lubrication in accordance with the information plate/label on the motor.

Always disconnect the power supply when servicing the pump.

Transportation:
Transportation of the pump or the pump unit:
Never lift or elevate in any way other than that described in this manual
Always drain the pump head and accessories of any liquid
Always ensure that lubricants are not able to leak
Always transport the pump in an upright position
Always ensure that the unit is securely fixed during transportation
Always use the original packaging or similar during transportation

Read the instructions carefully and pay special attention to the warnings! Always check the pump before operation.
-See pre-use check in section 3.3 Pre-use check
The pump is heavy.
Alfa Laval therefore recommends the use of a lifting crane when handling the pump.

3.1 Unpacking/delivery

Step 1
Always use a lifting crane when handling the pump (see technical data).

CAUTION
Alfa Laval cannot be held responsible for incorrect unpacking.

WARNING:
Be aware that certain pump configurations can tilt, and therefore cause injury to feet or fingers. The pump should be supported underneath the adapter, when not installed in the process line.

Check the delivery for:
1. Complete pump
2. Delivery note
3. Motor instructions

Step 2
Remove any packing materials from the inlet and outlet.
Avoid damaging the inlet and outlet.
Avoid damaging the connections for flushing liquid, if supplied.

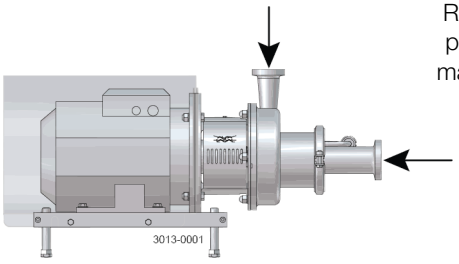

Step 3
Inspect the pump for visible transport damage.

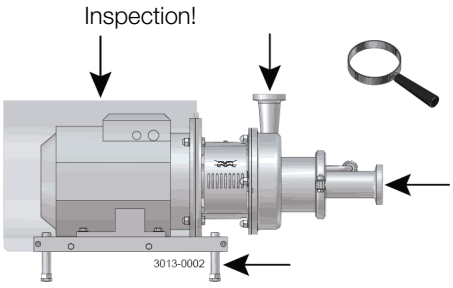

Step 4
Always remove the shroud, if fitted, before lifting the pump.

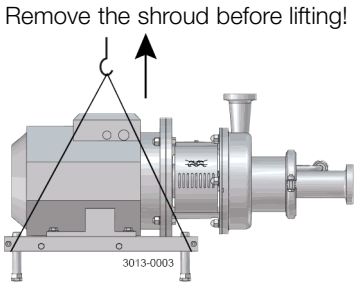

3 Installation

Read the instructions carefully and pay special attention to the warnings! Always check the pump before operation.
- See pre-use check in section 3.3 Pre-use check
The pump is heavy.
Alfa Laval therefore recommends the use of a lifting crane when handling the pump.

3.2 Installation

Step 1

Always read the technical data carefully.
(See chaper 6.1 Technical data)

Always use a lifting crane when handling the pump.

Always have the pump electrically connected by authorised personnel. (See the motor instructions).

CAUTION
Alfa Laval cannot be held responsible for incorrect installation.

WARNING:
Alfa Laval recommends the installation of a lockable repair breaker. If the repair breaker is to be used as an emergency stop, the colours of the repair breaker must be red and yellow.

Caution:
The pump does not prevent back flow when intentionally or unintentionally stopped. If back flow may cause a hazardous situation to arise, precautions must be taken e.g. a check valve can be installed in the system to prevent hazardous situations.

Note:
The 3A standard requires minimum clearance between the lowest part of the base, pump, motor or drive and for the floor to be no less than 4 in. (100 mm)

Step 2
Ensure at least 0.5 m (1.6 ft) clearance around the pump.

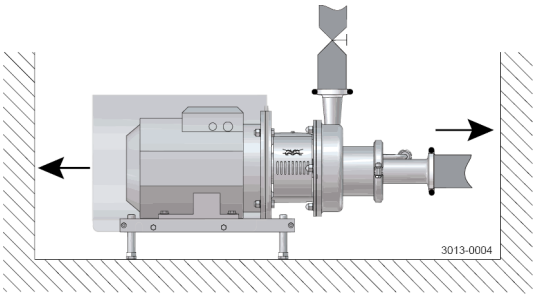

Step 3
Check that the flow direction is correct.
O: Outlet
I: Inlet

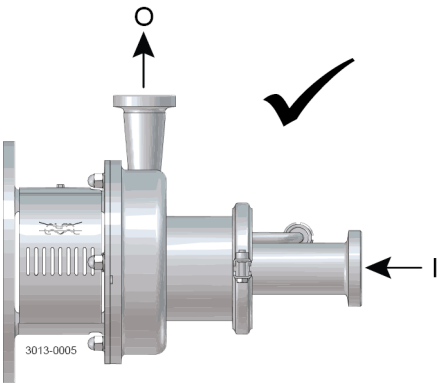

Read the instructions carefully and pay special attention to the warnings! Always check the pump before operation.
- See pre-use check in section 3.3 Pre-use check
The pump is heavy.
Alfa Laval therefore recommends the use of a lifting crane when handling the pump.

Step 4

1. Ensure that the pipelines are routed correctly.
2. Ensure that the connections are tight.

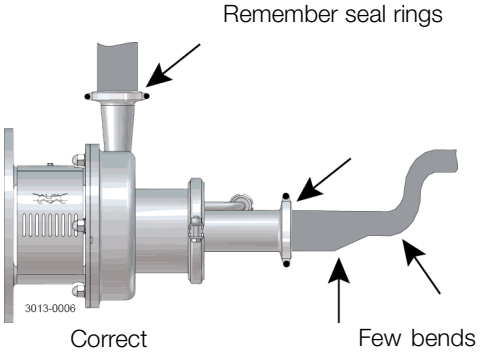

Step 5

Avoid stress on the pump
Pay special attention to

- Vibrations
- Thermal expansion of the tubes
- Excessive welding
- Overloading of the pipelines

Note
In the event of leakage at the shaft seal, the medium will drip from the slot into the bottom of the adapter. In this instance, Alfa Laval recommends placing a drip tray underneath the slot to collect the liquid.

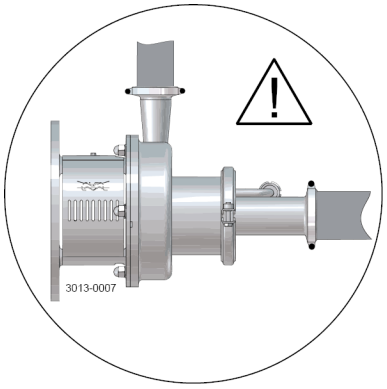

Step 6

To ensure optimal function of the selfpriming capacity, LKH Prime must be installed in such a way that ensures liquid is in the pump on start-up e.g. with a swan neck design as illustrated.

Note
Max running time when releasing air only should not exceed 15 min.

D = Min. 1,5 m 2” pipe
S = 200 mm

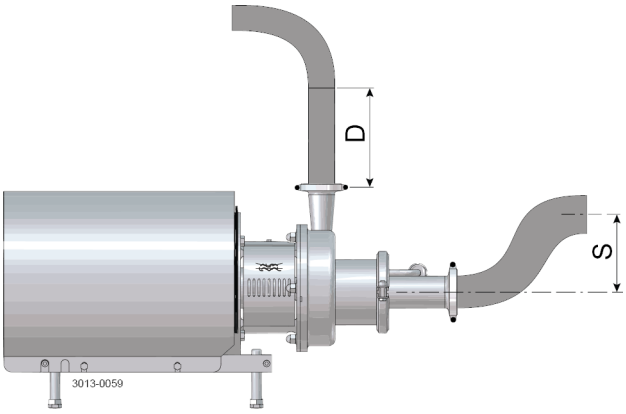

3 Installation

Read the instructions carefully and pay special attention to the warnings! Always check the pump before operation.
- See pre-use check in section 3.3 Pre-use check
The pump is heavy.
Alfa Laval therefore recommends the use of a lifting crane when handling the pump.

Step 7
If pump is fitted with drain option;
Never short circuit. the drain connections as this will reduce the air release capacity.
Always use two drain valves.

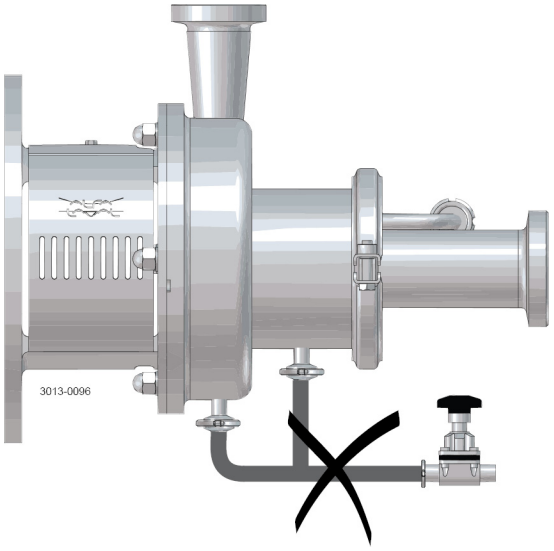

Incorrect

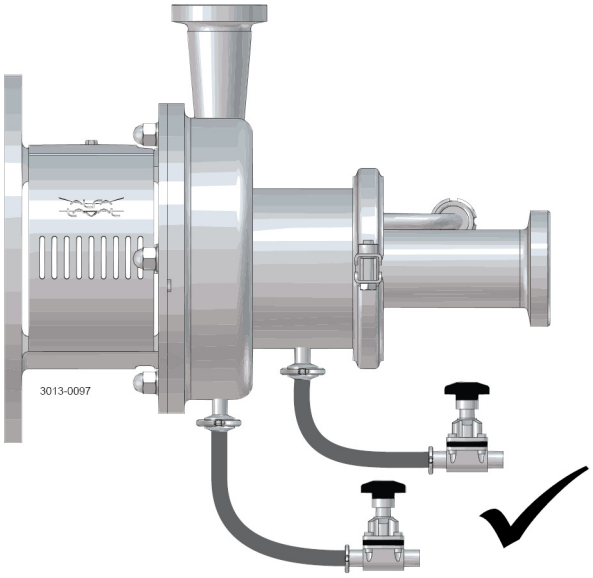

Correct

Read the instructions carefully and pay special attention to the warnings!
Check the direction of rotation of the impeller before operation.
- See the indication label on the pump.

3.3 Pre-check

Step 1

Always remove air screw and impeller before checking the direction of rotation.

Never start the pump if the impeller is fitted and the pump casing is removed.

1. Remove adapter shields (22)
2. Loosen unions and remove recirculation pipe (56)
3. Remove clamp (57) and front cover (60)
4. Remove air screw (58) with a spanner. Counter hold with a screwdriver. (See also instruction in section 5.3)
5. Unscrew cap nuts (24). Remove washers (24a) and pump casing (29)
6. Remove impeller (27). (See also instruction in section 5.3)

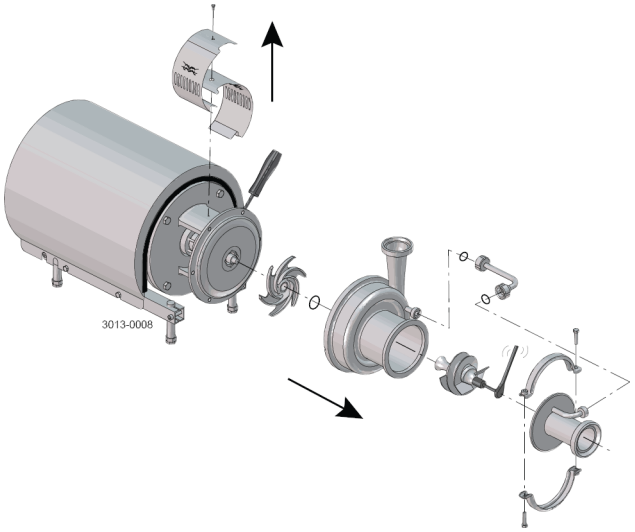

Step 2

1. Start and stop the motor momentarily.
2. Ensure that the direction of rotation of the stub shaft (7) is anticlockwise as viewed from the inlet side.

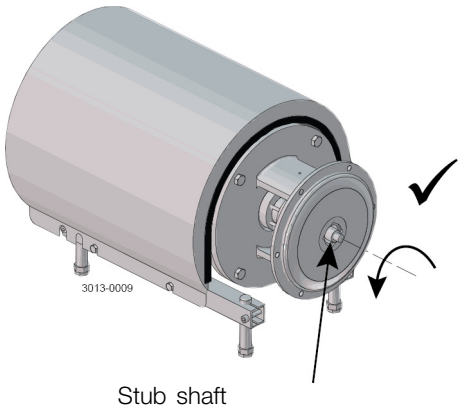

Stub shaft

Step 3

Fit and tighten the impeller (27).

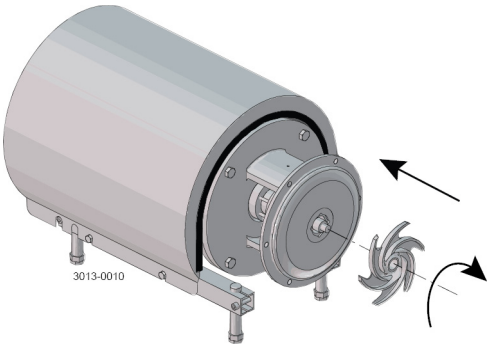

3 Installation

Read the instructions carefully and pay special attention to the warnings!
Check the direction of rotation of the impeller before operation.
- See the indication label on the pump.

Step 4

1. Fit pump casing (29) and washers (24a). Fit and tighten cap nuts (24) according to torque values in chapter 6 Technical data
2. Fit air screw (58) and tighten with a spanner (Torque = 20Nm (15 lbf-ft))
3. Fit front cover O-ring (59) and fit and align front cover (60). Fit clamp and tighten screws (57) gently
4. Fit recirculations pipe (56), align front cover (60) and tighten unions
5. Tighten clamp screws (57)
6. Fit the apaptor shields (22)

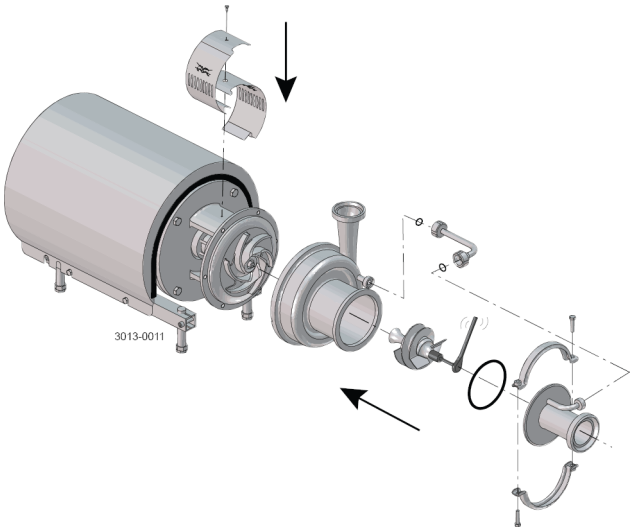

Read the instructions carefully and pay special attention to the warnings!
Check the direction of rotation of the impeller before operation.
- See the indication label on the pump.

3.4 Recycling information

Unpacking
- Packing material consists of wood, plastics, cardboard boxes and in some cases metal straps
- Wood and cardboard boxes can be reused, recycled or used for energy recovery
- Plastics should be recycled or burnt at a licensed waste incineration plant
- Metal straps should be sent for material recycling

Maintenance
- During maintenance, oil and wearing parts in the machine are replaced
- All metal parts should be sent for material recycling
- Worn or defective electronic parts should be sent to a licensed handler for material recycling
- Oil and all non-metal wearing parts must be disposed of in accordance with local regulations

Scrapping
- At the end of use, the equipment must be recycled according to relevant local regulations. In addition to the equipment itself, any hazardous residue from the process liquid must be taken into account and handled in the necessary way. When in doubt, or in the absence of local regulations, please contact your local Alfa Laval sales company.

4 Operation

Read the instructions carefully and pay special attention to the warnings!

4.1 Operation/control

Step 1

Always read the technical data carefully. See chapter 6.1 Technical data

CAUTION
Alfa Laval cannot be held responsible for incorrect operation/control.

Step 2

Never touch the pump or pipelines when pumping hot liquids or when sterilising.

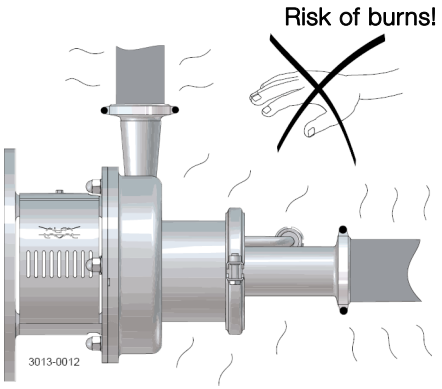

Step 3

Never run the pump when both the suction side and pressure side are blocked.

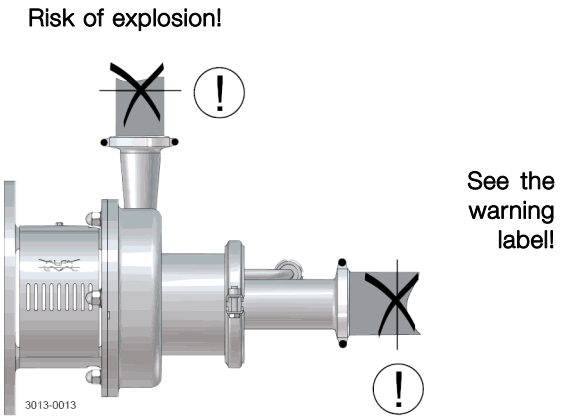

Step 4

CAUTION
The shaft seal must not run dry.

CAUTION
Never throttle the inlet side.

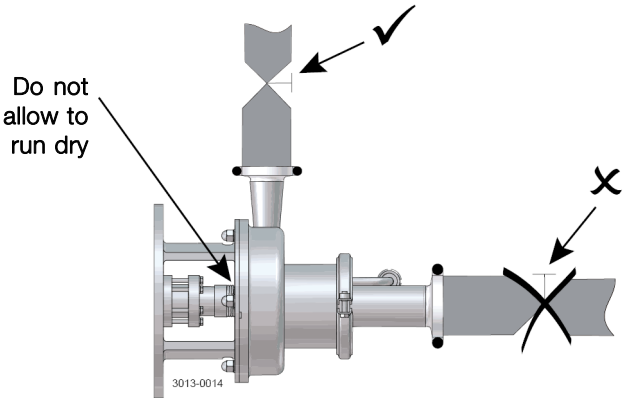

Read the instructions carefully and pay special attention to the warnings!

Step 5

Double mechanical shaft seal:
1. Connect the inlet of the flushing liquid correctly. (R1/8")
2. Regulate the water supply correctly

O: Outlet
I: Inlet

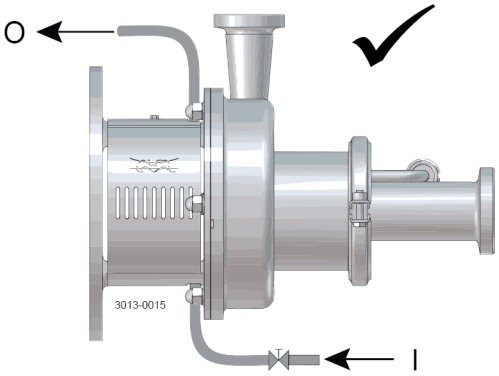

T_{max} = 70°C
P_{max} = 5 bar
(double mechanical seal)

Step 6
Control:
Reduce the capacity and the power consumption by means of:

- Throttling the pressure side of the pump
- Reducing the impeller diameter
- Reducing the speed of the motor (when not releasing air)

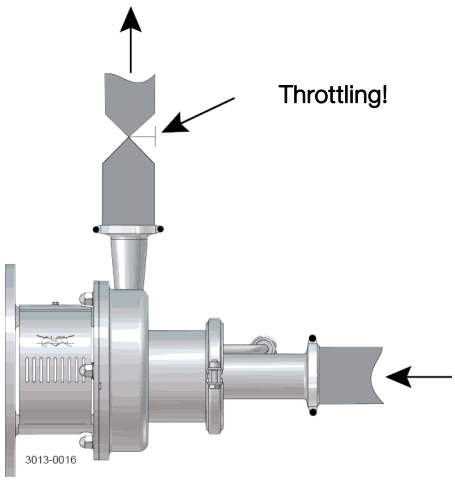

4 Operation

Pay attention to possible faults.
Read the instructions carefully.

4.2 Trouble shooting

NOTE!
Read the maintenance instructions carefully before replacing worn parts.

Problem	Cause/result	Remedy
Motor overloaded	- Pumping of viscous liquids - Pumping of high density liquids - Low outlet pressure (counter pressure) - Lamination of precipitates from the liquid	- Larger motor or smaller impeller - Higher counter pressure (throttling) - Frequent cleaning
Cavitation: - Damage - Pressure reduction (sometimes to zero) - Increase in the noise level	- Low inlet pressure - High liquid temperature	- Increase the inlet pressure - Reduce the liquid temperature - Reduce the pressure drop before the pump - Reduce speed
Leaking shaft seal	- Running dry	Replace: All wearing parts
	- Incorrect rubber grade	If necessary: - Change rubber grade
	- Abrasive particles in the liquid	- Select stationary and rotating seal ring in silicon carbide/silicon carbide
	- Use of incorrect SiC/SiC single seal	- Change to SiC/SiC seal marked “LKH Prime”
Leaking O-ring seals	Incorrect rubber grade	Change rubber grade
No/little air release	- Pump not properly primed - Pump speed too low	- Ensure pump is primed - Increase pump speed during air release

The pump is designed for cleaning in place (CIP). CIP = Cleaning In Place.
Read the instructions carefully and pay special attention to the warnings!
NaOH = Caustic Soda.
HNO_3 = Nitric acid.

4.3 Recommended cleaning

Step 1

Always handle lye and acid with great care.

Caustic danger!

Always use rubber gloves!

Always use protective goggles!

Step 2

Never touch the pump or the pipelines when sterilising.

Risk of burns!

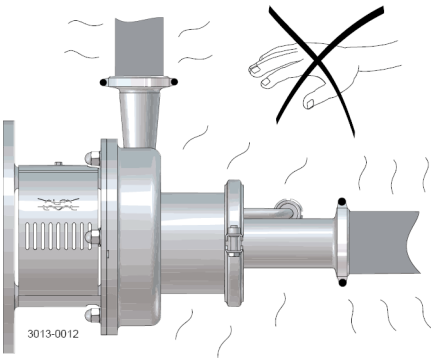

Step 3

Examples of cleaning agents: Use clean water, free from chlorides.

1. 1% by weight NaOH at 70°C (158°F).

1 kg (2.2 lb) NaOH	+	100 l (26.4 gal) water	= Cleaning agent.
2.2 l (0.6 gal) 33% NaOH	+	100 l (26.4 gal) water	= Cleaning agent.

2. 0.5% by weight HNO_3 at 70°C (158°F).

0.7 l (0.2 gal) 53% HNO_3	+	100 l (26.4 gal) water	= Cleaning agent.

1. Avoid excessive concentration of the cleaning agent
   ⇒ Dispense gradually!
2. Adapt the cleaning flow to the process.
   Sterilisation of milk/viscous liquids
   ⇒ Increase the cleaning flow!

Step 4

Always rinse well with clean water after using a cleaning agent.

Always rinse!

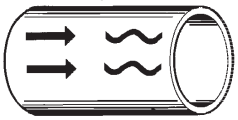

Clean water Cleaning agent

NOTE
Cleaning agents must be stored/disposed of in accordance with current regulations/directives.

4 Operation

The pump is designed for cleaning in place (CIP). CIP = Cleaning In Place.
Read the instructions carefully and pay special attention to the warnings!
NaOH = Caustic Soda.
HNO_3 = Nitric acid.

NOTE:
If pumps are sterilised using steam, standard 3A requires the process system to be designed to automatically shut down if the product pressure in the system becomes less than that of the atmosphere and it cannot be started until the system is re-sterilised.

Maintain the pump with care. Read the instructions carefully and pay special attention to the warnings!
Always have spare shaft seals and rubber seals to hand.
See separate motor instructions.
Check the pump for smooth operation after service.

5.1 General maintemance

Step 1

Always read the technical data carefully. (See section 6.1)

Always disconnect the power supply when servicing the pump.

NOTE
All scrap must be stored//disposed of in accordance with current regulations/directives.

Step 2

Never service the pump when it is hot.

Risk of burns!

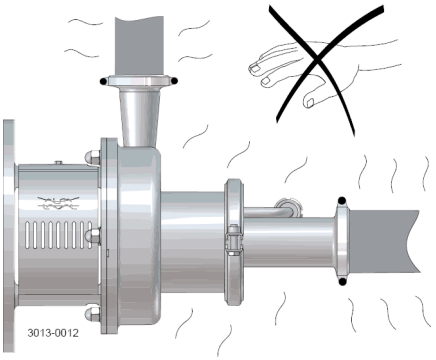

Step 3

Never service the pump if pressurised.

CAUTION
Fit the electrical connections correctly if they have been removed from the motor during service.

CAUTION
Pay special attention to the warnings!

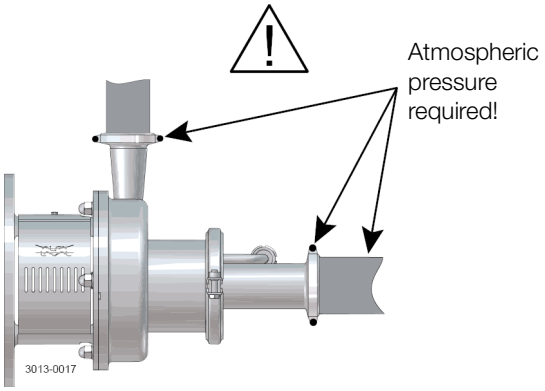

Step 4
Recommended spare parts:
Order service kits from the service kits list
(See section 7).

Ordering spare parts
Contact your local Alfa Laval sales company.

5 Maintenance

Maintain the pump with care. Read the instructions carefully and pay special attention to the warnings!
Always have spare shaft seals and rubber seals to hand.
See separate motor instructions.
Check the pump for smooth operation after service.

	Shaft seal	Rubber seals	Motor bearings
Preventive maintenance	**Replace after 12 months:** (one-shift) complete shaft seal	Replace when replacing the shaft seal	
Maintenance after leakage (leakage normally starts slowly)	**Replace at the end of the day:** complete shaft seal	Replace when replacing the shaft seal	
Planned maintenance	- Regular inspection for leakage and smooth operation - Keep a record of the pump - Use the statistics for inspection planning **Replace after leakage:** Complete shaft seal	Replace when replacing the shaft seal	Yearly inspection is recommended - Replace complete bearing if worn - Ensure that the bearing is axially locked (see motor instructions)
Lubrication	**Before fitting** Lubricate the O-rings with silicone grease or silicone oil	**Before fitting** Silicone grease or silicone oil	

Pre-use check

CAUTION!
Fit the electrical connections correctly if they have been removed from the motor during servicing.
(See pre-use check in section 3.2 Installation).

Pay special attention to warnings!

1. Start and stop the motor momentarily
2. Ensure that the pump operates smoothly.

Maintain the pump with care. Read the instructions carefully and pay special attention to the warnings!
Always have spare shaft seals and rubber seals to hand.
See separate motor instructions.
Check the pump for smooth operation after service.

5.2 Cleaning procedure

Step 1
Cleaning procedure for soiled air screw tapped hole:
1. Remove air screw (58) as per section 5.3 of the Service manual.
2. Submerge and soak the air screw for 5 minutes in COP tank with 2% caustic wash.
3. Scrub the blind tapped air screw hole vigorously by plunging a clean 1/2” diameter sanitary bristle pipe brush in and out of the hole for two minutes while submerged.
4. Soak air screw in acid sanitiser for 5 minutes, then scrub blind tapped hole as described in step 3 above.
5. Rinse well with clean water and blow-dry blind tapped hole with clean air.
6. Swab test the inside of the tapped hole to determine cleanliness.
7. Should the swab test fail, repeat steps 2 to 6 above until the swab test is passed.

Should swab testing continue to fail, or time is of the essence, install a new (spare) air shaft.

Step 2
Cleaning procedure for soiled shaft tapped hole:
1. Remove shaft (7) as per section 5.3 of the Service manual.
2. Remove stud bolt (7a) from shaft.
3. Submerge and soak the shaft for 5 minutes in COP tank with 2% caustic wash.
4. Scrub the blind tapped shaft hole vigorously by plunging a clean 1/2” diameter sanitary bristle pipe brush in and out of the hole for two minutes while submerged.
5. Soak shaft in acid sanitiser for 5 minutes, then scrub blind tapped hole as described in step 4 above.
6. Rinse well with clean water and blow-dry blind tapped hole with clean air.
7. Swab test the inside of the tapped hole to determine cleanliness.
8. After approved swab test, assemble stud bolt (7a) in shaft (7) with tightening torque 65Nm
9. Shoud the swab test fail, repeat steps 3 to 7 above until the swab test is passed.

Should swab testing continue to fail, or time is of the essence, install a new (spare) shaft.

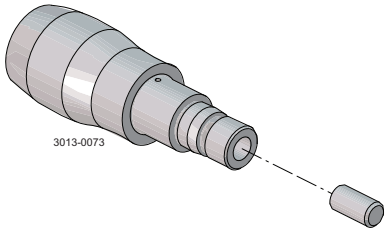

5 Maintenance

Read the instructions carefully. The items refer to the parts list and service kits section.
Handle scrap correctly.
** : Relates to the shaft seal.*

5.3 Dismantling of pump/shaft seals

Step 1
Remove screw (23) and safety guard (22)

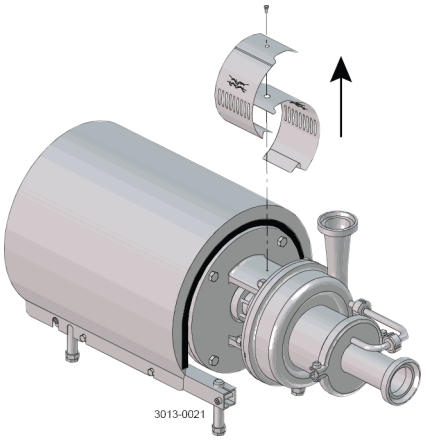

Step 2 *
1. Loosen unions and remove recirculation pipe (56)
2. Remove clamp (57) and front cover (60)

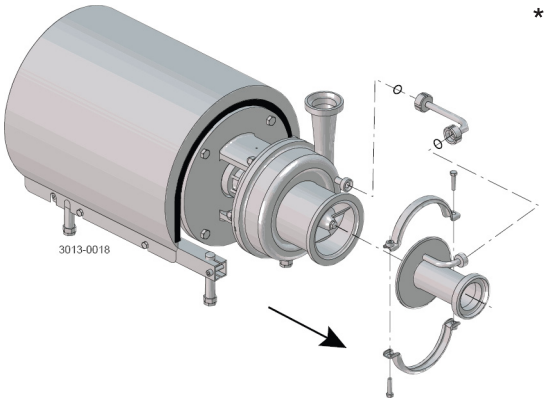

Step 3
1. Remove air screw (58) with a spanner. Counter hold with a screwdriver on pump shaft (7)
2. Unscrew cap nuts (24). Remove washers (24a) and pump casing (29)

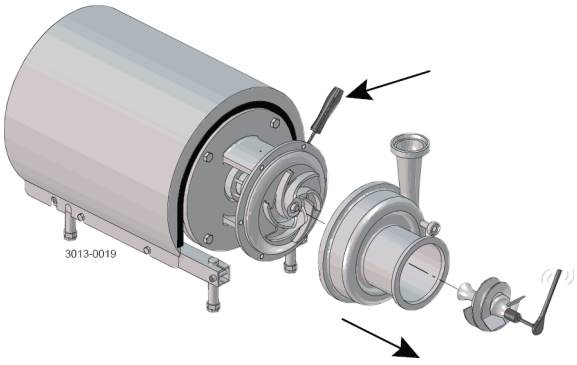

Read the instructions carefully. The items refer to the parts list and service kits section.
Handle scrap correctly.
** : Relates to the shaft seal.*

Step 4
Double mechanical shaft seal:
Unscrew tubes (42) using a spanner.

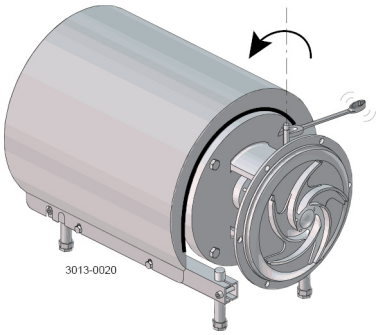

Step 5
1. Remove impeller (27). If necessary, loosen the impeller by tapping gently on the impeller vanes
2. Remove the O-ring (38) from the impeller

Counter hold with a screwdriver - if necessary!

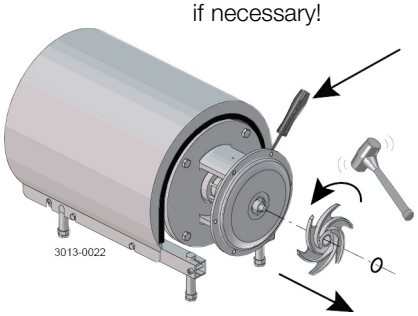

Step 6
1. Remove the O-ring (26) from the back plate (25)
2. Unscrew the nuts (20) and remove the washers (21) and back plate (25)

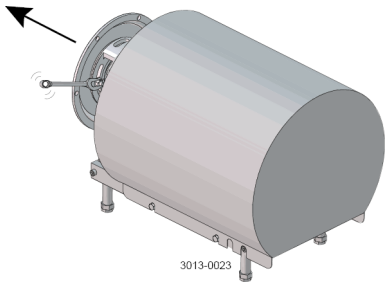

Step 7
1. Remove the stationary seal ring (11)
2. Remove the O-ring (12) from the back plate (25)

Use the tool supplied
*

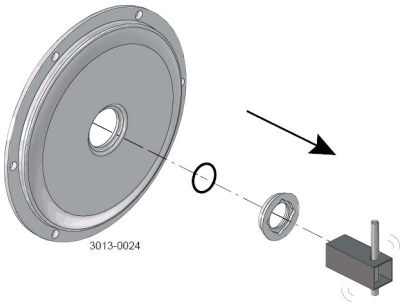

Left-hand thread!

5 Maintenance

Read the instructions carefully. The items refer to the parts list and service kits section.
Handle scrap correctly.
** : Relates to the shaft seal.*

Step 8 *
Double mechanical shaft seal:
1. Remove screws (41) and seal housing (40a)
2. Remove rotating seal rings (14) and drive ring (52) from spring (13)
3. Remove O-rings (15) from rotating seal rings (14)

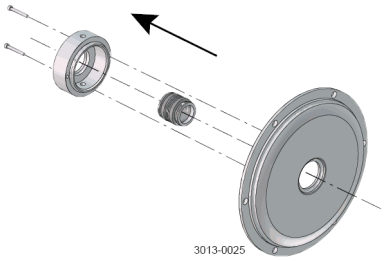

Step 9 *
Double mechanical shaft seal:
1. Remove stationary seal ring (51) from seal housing (40a)
2. Remove O-ring (50) from stationary seal ring (51)
3. Remove O-ring (44) from seal housing (40a)

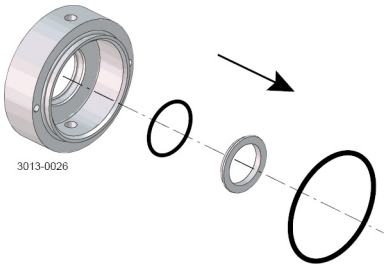

Step 10 *
1. Remove the complete shaft seal from stub shaft (7)
2. Remove spring (13) and rotating seal ring (14) from the drive ring (10)

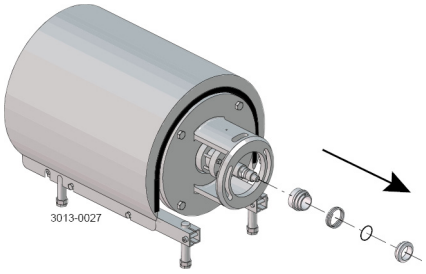

Step 11
1. Remove shroud (2)
2. Unscrew nuts (18) and remove washers (19), screws (17) and adapter (16)

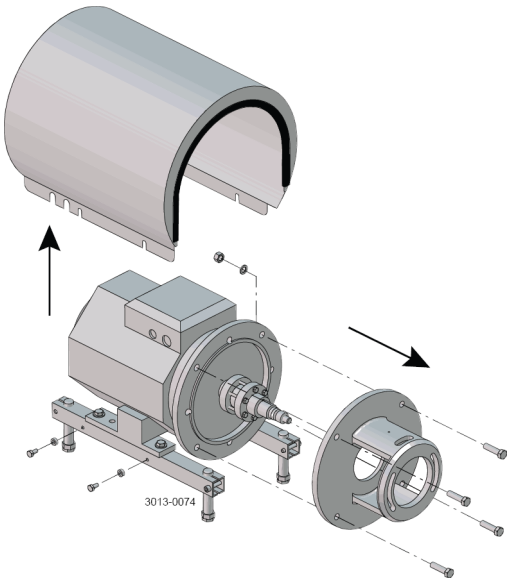

Read the instructions carefully. The items refer to the parts list and service kits section.
Handle scrap correctly.
⋆ : Relates to the shaft seal.

Step 12
1. Slide off stub shaft (7) together with compression rings (5a, 5b)

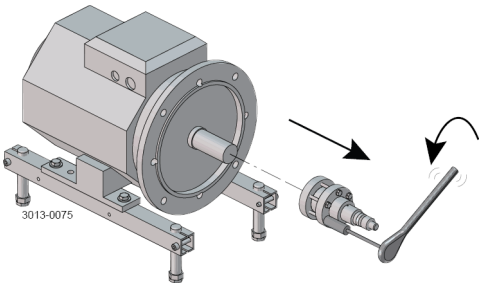

5 Maintenance

Read the instructions carefully. The items refer to the parts list and service kits section.
Handle scrap correctly.
** : Relates to the shaft seal.*

5.4 Assembly of pump/single shaft seal

NOTE: If fitting SiC/SiC single seal, the static seal face must be marked “LKH Prime”.

Step 1
1. Remove spring (13)

NOTE!
Make sure that O-ring (15) has maximum clearance from the sealing surface.

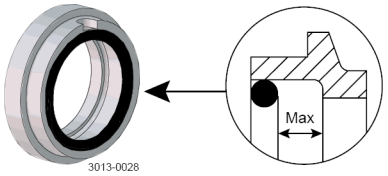

*

Step 2
1. Refit spring (13) on rotating seal ring (14)
2. Fit the spring and the rotating seal ring on drive ring (10)

CAUTION
Ensure that the driver on the drive ring is inserted into the notch in the rotating seal ring.

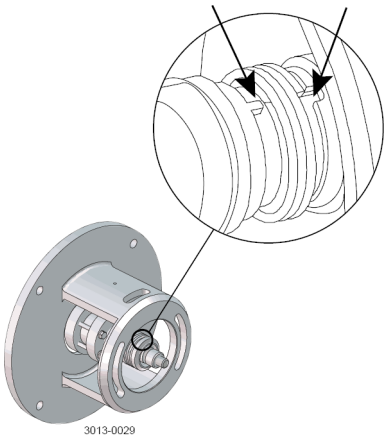

*

Step 3
Fit the complete shaft seal on the stub shaft (7).

NOTE!
Make sure that the Connex pin (8) on the stub shaft is inserted into the notch in the drive ring (10).

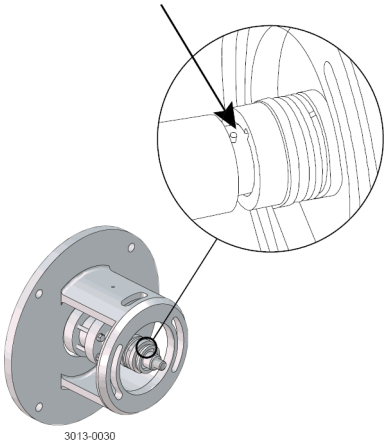

*

Read the instructions carefully. The items refer to the parts list and service kits section.
Handle scrap correctly.
** : Relates to the shaft seal.*

Step 4 *

1. Fit O-ring (12) on stationary seal ring (11) and lubricate
2. Screw the stationary seal ring into the back plate (25)

CAUTION
Only tighten by hand to avoid deforming the stationary seal ring.
(Max. 7 Nm/5 lbf-ft)

Use the tool supplied

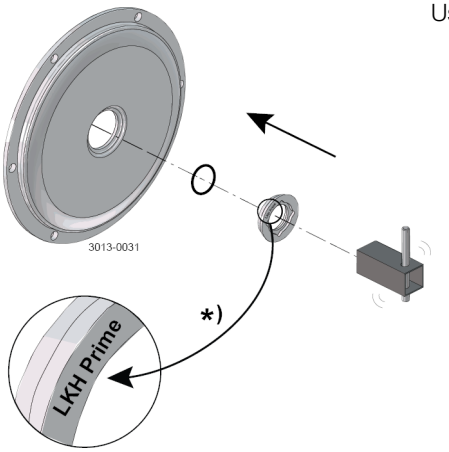

Left-hand thread!

*) **NOTE!** : If fitting SiC/SiC single seal, the static seal face must be marked “LKH Prime”.

Step 5 *

1. Clean the sealing surfaces with contact cleaner before fitting the back plate (25)
2. Carefully guide the back plate onto the adapter (16)
3. Fit washers (21) and nuts (20)

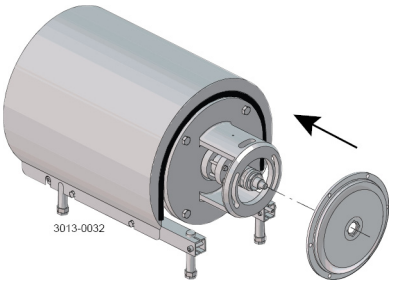

Step 6

Lubricate O-ring (26) and slide it onto back plate (25).

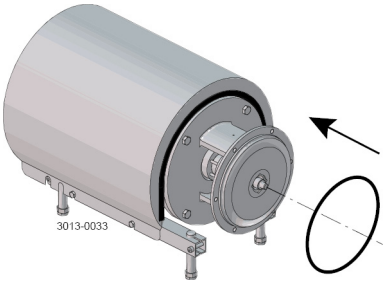

Step 7

1. Lubricate O-ring (38) and fit into impeller (37)
2. Lubricate impeller hub with silicone grease or oil
3. Screw the impeller onto the stub shaft (7)

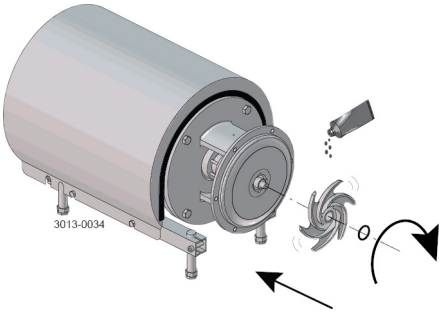

5 Maintenance

Read the instructions carefully. The items refer to the parts list and service kits section.
Handle scrap correctly.
** : Relates to the shaft seal.*

Step 8
1. Fit pump casing (29) and washers (24a). Fit and tighten cap nuts (24) according to torque values in chapter 6 Technical data
2. Adjust pump casing (29) to correct position.
3. Tighten nuts (20) for back plate (25), according to torque values in chapter 6 Technical data
4. Fit air screw (58) and tighten with a spanner (Torque = 20Nm (15 lbf-ft))

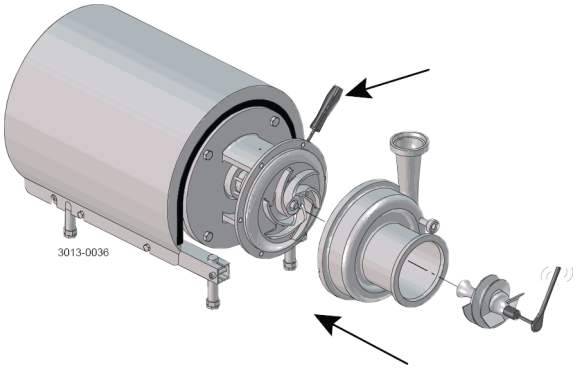

Step 9
1. Fit front cover O-ring (59) and fit and align front cover (60)
2. Fit clamp and tighten screws (57) gently
3. Fit recirculation pipe (56), align front cover (60) and tighten unions
4. Tighten clamp screws (57)

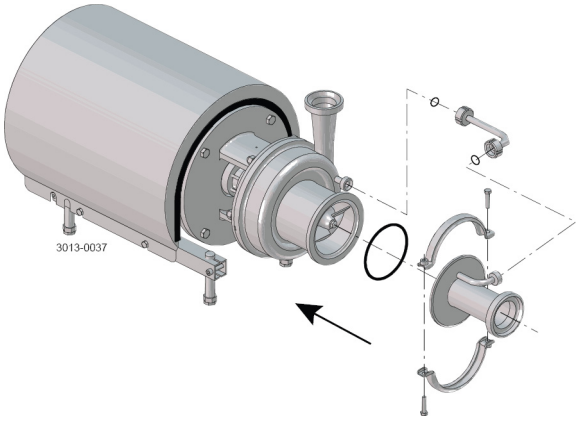

Step 10
Fit safety guards (22) and screw (23), then tighten.
If pump is not supplied with flush connections, the holes in the apapter will be covered by the guard.

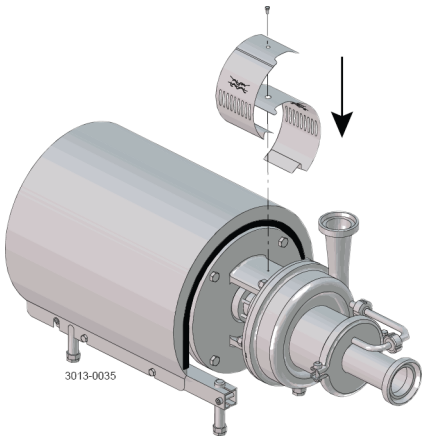

Read the instructions carefully. The items refer to the parts list and service kits section.
Lubricate the rubber seals before fitting them.
** : Relates to the shaft seal.*

5.5 Assembly of pump/double mecanical shaft seal

Step 1

1. Fit O-rings (15) in rotating seal rings (14) *
2. Fit spring (13) onto one of the rotating seal rings (14) and place the drive ring (52) in between

Step 2 *

1. Fit the second rotating ring (14) on the other end of the spring
2. Place the parts on the stationary seal ring fitted in the back plate (25)

NOTE
Ensure that both drive pins on the drive ring are inserted into the notches in the rotating seal rings.

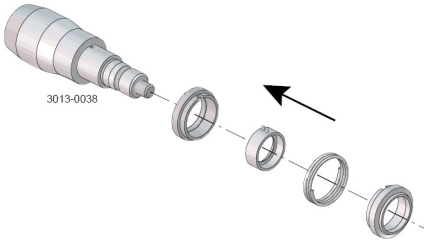

Step 3 *

1. Lubricate O-ring (44) and slide onto seal housing (40a)
2. Lubricate O-ring (50) and fit on stationary seal ring (51), then fit this in the seal housing

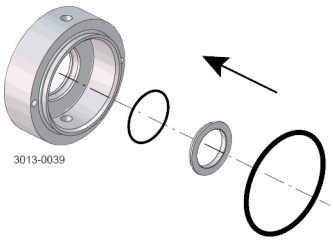

Step 4 *

1. Fit O-ring (12) on stationary seal ring (11) and lubricate
2. Screw the stationary seal ring into the back plate (25)

CAUTION
Only tighten by hand to avoid deforming the stationary seal ring. (Max. 7 Nm/5 lbf-ft)

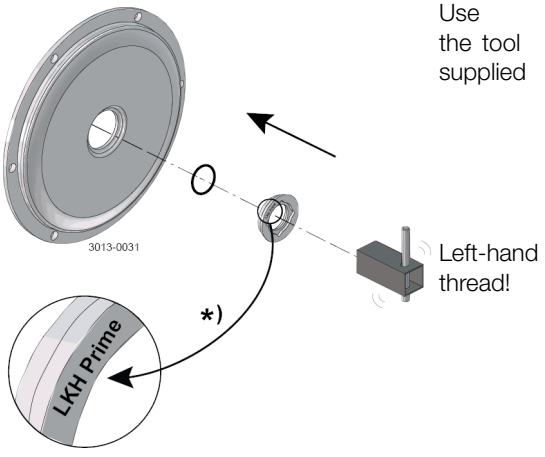

*) NOTE! : If fitting SiC/SiC single seal, the static seal face must be marked “LKH Prime”.

5 Maintenance

Read the instructions carefully. The items refer to the parts list and service kits section.
Lubricate the rubber seals before fitting them.
** : Relates to the shaft seal.*

Step 5 *

1. Clean the sealing surfaces with contact cleaner
2. Fit seal housing (40a) onto the back plate (25) and tighten screws (41)

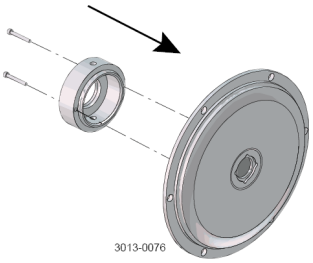

Step 6

1. To enable the fitting of the back plate (25) with the shaft seal, remove the Connex pin (8) from the stub shaft (7) (if fitted)
2. Carefully guide the back plate onto adaptor (16)
3. Fit washers (21) and nuts (20)

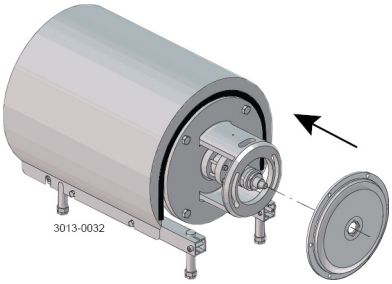

Step 7

Lubricate O-ring (26) and slide it onto back plate (25)

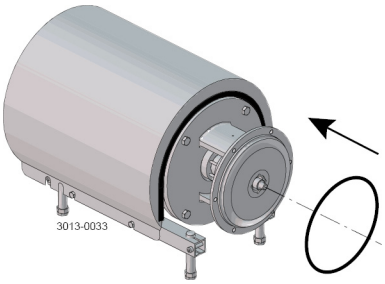

Step 8

1. Lubricate the O-ring (38) and fit it into the impeller (37)
2. Lubricate the impeller hub with silicone grease or oil
3. Screw impeller (27) onto stub shaft (7)

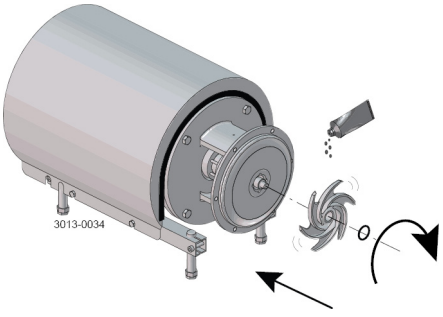

Step 9 *

1. Screw tubes (42) into seal housing (40a).
2. Tighten with a spanner.

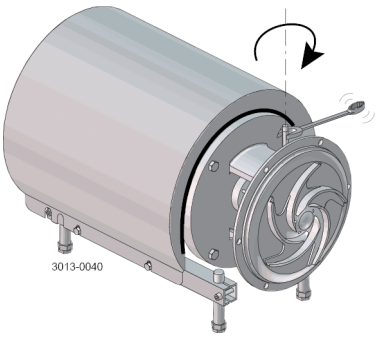

Read the instructions carefully. The items refer to the parts list and service kits section.
Lubricate the rubber seals before fitting them.
⋆ : Relates to the shaft seal.

Step 10

1. Fit pump casing (29) and washers (24a). Fit and tighten cap nuts (24) according to torque values in chapter 6 Technical data
2. Adjust pump casing (29) to correct position
3. Tighten nuts (20) for back plate (25), according to torque values in chapter 6, Technical data
4. Fit air screw (58) and tighten with a spanner (Torque = 20Nm (15 lbf-ft))

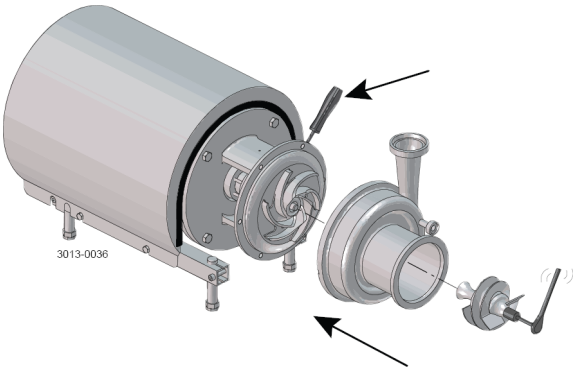

Step 11

1. Fit front cover O-ring (59) and fit and align front cover (60)
2. Fit clamp and tighten screws (57) gently
3. Fit recirculations pipe (56), align front cover (60) and tighten unions
4. Tighten clamp screws (57)

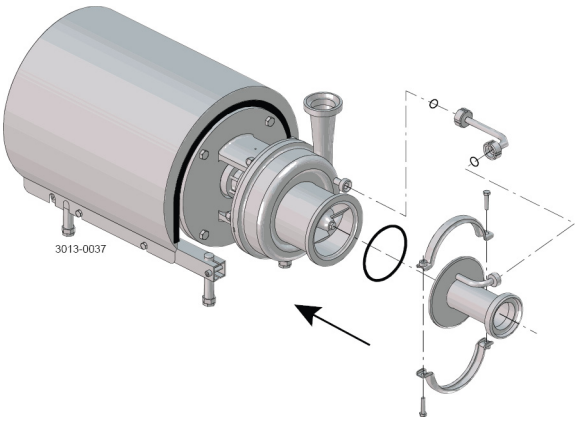

Step 12

Fit safety guard (22) and screw (23), then tighten.
If pump is not supplied with flush connections, the holes in the adapter will be covered by the guard.

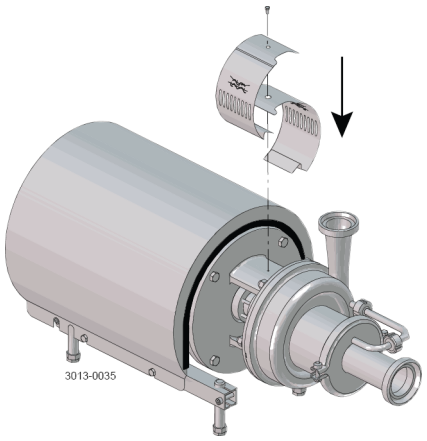

5 Maintenance

Read the instructions carefully. The items refer to the parts list and service kits section.
Lubricate the rubber seals before fitting them.
⋆ : Relates to the shaft seal.

5.6 Adjustment of shaft

Step 1
1. Loosen screws (6)
2. Pull off stub shaft (7) together with compression rings (5a, 5b)

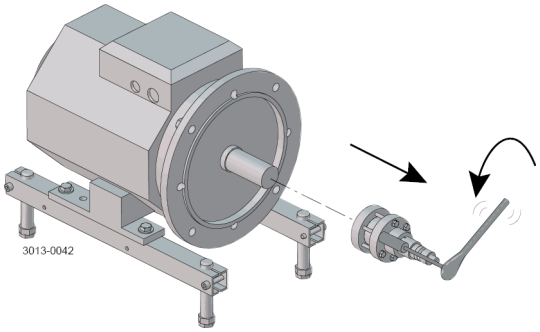

Step 2
1. Push stub shaft (7) together with compression rings (5a, 5b) onto the motor shaft
2. Check that the clearance between the end of the stub shaft and the motor flange is 10-20 mm (0.39 - 0.78 inch)

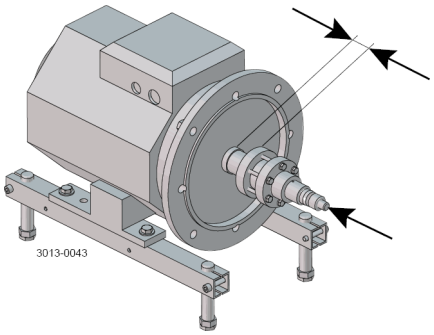

Step 3
1. Tighten screws (6) gently and evenly
2. Ensure that the stub shaft (7) can be moved on the motor shaft

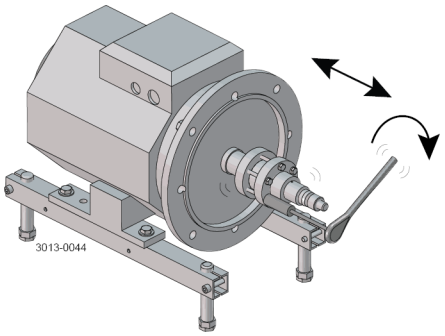

Step 4
1. Fit shroud (2)
2. Fit adapter (16), screws (17), washers (19) and nuts (18) and tighten

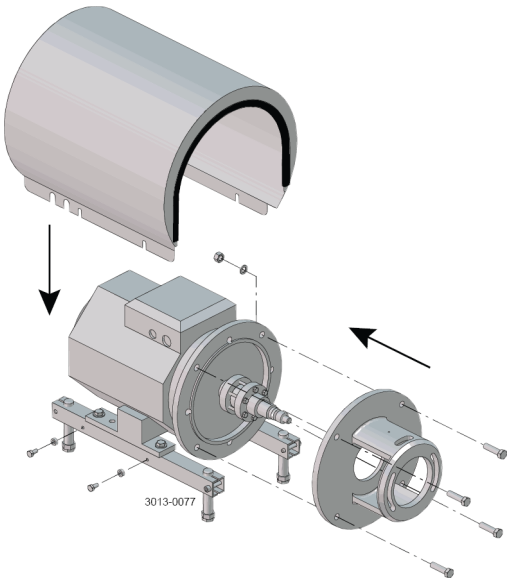

Read the instructions carefully. The items refer to the parts list and service kits section.
Lubricate the rubber seals before fitting them.
** : Relates to the shaft seal.*

Step 5
1. For the double mechanical shaft seal:
   Fit drive ring (52) on stub shaft (7)
2. Fit back plate (25), washers (21) and nuts (20), then tighten

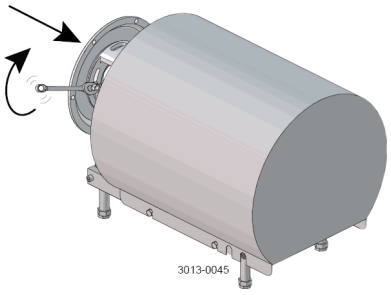

*

Step 6
1. Fit impeller (27) on stub shaft (7)
2. Ensure that the clearance between the impeller and the back plate (25) is correct: 0.5 mm (0.02 inch)
3. Tighten screws (6) evenly until the stub shaft (7) cannot move on the motor shaft

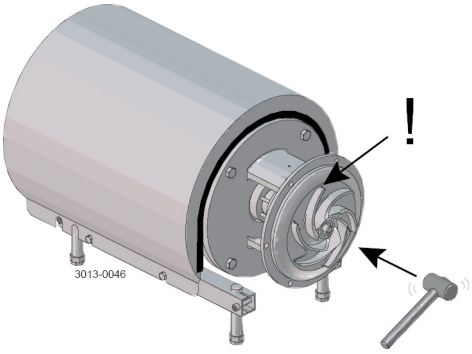

Step 7
1. Remove impeller (27), back plate (25) and drive ring (52).
2. Tighten screws (6) evenly to 15 Nm (11 lbf-ft).
3. Pump is assembled according to section 5.4 for single shaft seal and section 5.5 for double mechanical seal.

Counter hold with a screwdriver

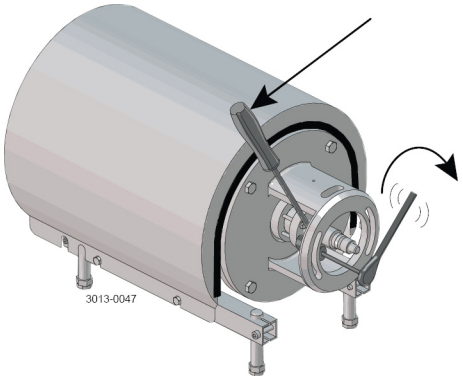

*

15Nm (11 lbf-ft)

6 Technical data

It is important to observe the technical data during installation, operation and maintenance.
Inform personnel about the technical data.

6.1 Technical data

The LKH pump is a highly efficient and econominal centrifugal pump, which meets the requirements of sanitary and gentle product treatment and chemical resistance. LKH Prime UltraPure is available in the following sizes -20. The instruction manual is part of the delivery: Read the instructions carefully. The pump is very heavy, which is why Alfa Laval recommends the use of a lifting crane when handling the pump.

Data	
Max. inlet pressure	500 kPa (5 bar) (72.5 psi)
Temperature range	-10°C to +140°C (EPDM) (14 to 284°F)
Max. speed:	3600 rpm
Min. speed, pumping product (no air):	900RPM
Min. speed, releasing air:	2800RPM (full speed 2 poled motor, 50Hz)
Materials	
Product wetted steel parts	AISI 316L
Other steel parts	Stainless steel
Finish	Standard blasted
Product wetted seals	EPDM (standard)
Other O-rings	EPDM (standard)
Alternative seals	Nitrile (NBR) and fluorinated rubber (FPM)
Shaft seal	
Seal types	External single or double mechanical seal
Max. temperature flush medium	70°C
Max. water pressure (DMS)	Normally atmospheric (max. 5 bar) (max. 72.5 psi)
Water consumption (double mechanical seal)	0.25-0.5 l/min. (0.07-0.13 gl)
Material, stationary seal ring	Acid-resistant steel with sealing surface of silicon carbide
Material, rotating seal ring	Carbon (standard) or silicon carbide
Material, O-rings	EPDM (standard)
Alternative material, O-rings	Nitrile (NBR) and fluorinated rubber (FPM).
Air release time (no medium supply)	Max 15 min
NOTE: If running SiC/SiC single seal, the static seal face must be marked “LKH Prime”.	
Motor	
Foot-flanged motor according to IEC metric or NEMA standard, 2 poles = 3000/3600 rpm. at 50/60 Hz IP55, insulation class F	

For further information, see PD sheet.

It is important to observe the technical data during installation, operation and maintenance.
Inform personnel about the technical data.

6.2 Relubrication intervals

The table is based on a 100°C internal bearing temperature. A temperature increase of 15°C (ambient or internal in bearings) will reduce the greasing interval and bearing lifetime by 50%. The lubrication interval for vertically mounted pumps is half the value of that shown in the table.

ABB IEC motors

Motor power (kW)	LKH-5 -90 LKHI-10 -60* LKH-110* LKHSP LKH UltraPure LKH Prime LKH Prime UltraPure 50/60 Hz	LKHPF-10 -60 LKHI-10 -60 LKH-110 3300 Bearing 50/60 Hz	LKHPF-70 LKH-120 7200 Bearing 50/60 Hz	LKH-85 7300 Bearing 50/60 Hz
0.75	Permanently lubricated			
1.1	Permanently lubricated			
1.5	Permanently lubricated	Not available		
2.2	Permanently lubricated	Permanently lubricated		
3.0	Permanently lubricated	Not available		
4.0	Permanently lubricated	Permanently lubricated		
5.5	Permanently lubricated	3600h/3000h - DE/NDE:15g*		
7.5	Permanently lubricated	3600h/3000h - DE/NDE:15g*		
11	Permanently lubricated	3100h/2300h - DE/NDE:25g		
15	Permanently lubricated	3100h/2300h - DE/NDE:25g		
18.5	Permanently lubricated	3100h/2300h - DE/NDE:25g		
22	Permanently lubricated	2600h/2000h - DE/NDE:42g	4000h/2200h - DE/NDE:42g	
30	Permanently lubricated		4000h/2800h - DE/NDE:55g	8000h/ - - DE/NDE:40g
37	Permanently lubricated		4000h/2800h - DE/NDE:55g	8000h/ - - DE/NDE:40g
45	Permanently lubricated		2500h/1000h - DE/NDE:55g	8000h/ - - DE/NDE:40g
55	Permanently lubricated		2500h/1000h - DE/NDE:73g	8000h/3000h - DE/NDE:60g
75	Permanently lubricated		1500h/500h - DE/NDE:73g	4000h/1500h - DE/NDE:60g
90				4000h/2800h - DE/NDE:45g
110				4000h/2800h - DE/NDE:45g

* inlet pressure less than 10 bar (145 psi)

Recommended grease types:

LKHPF-10/-70 – LKH-110 - LKH-120:
Esso: Unirex N2 or N3 (Lithium complex base)
Mobil: Mobilith SHC 100 (Lithium complex base)
Shell: Shell Gadus S5 V100 2 (Lithium complex base)
Klüber: Klüberplex BEM 41-132 (Special Lithium base)
FAG: Arcanol TEMP110 (Lithium complex base)
Lubcon: Turmogrease L 802 EP PLUS (Lithium complex base)

*LKHPF-10/-60 – LKH-110
Klüber: Klüber Asonic HQ72-102 (Polyurea base)

LKH-85:
Klüber: Klüberplex Quiet BQH 72-102 (Polyurea base)
Lubcon: Turmogrease PU703 (Polyurea base)

WARNING: Polyurea-based grease must not be mixed with Lithium complex base grease and vice versa.

6 Technical data

It is important to observe the technical data during installation, operation and maintenance.
Inform personnel about the technical data.

WEG IEC Motors, IE3

Motor power (kW)	LKH-5 -70 LKHI-10 -60* LKH-110* LKHSP, LKH Evap LKH UltraPure LKH Prime 50/60 HZ
0.75	Permanently lubricated
1.1	Permanently lubricated
1.5	Permanently lubricated
2.2	Permanently lubricated
3.0	Permanently lubricated
4.0	Permanently lubricated
5.5	Permanently lubricated
7.5	Permanently lubricated
11	Permanently lubricated
15	Permanently lubricated
18.5	Permanently lubricated
22	10000/10000h - DE/NDE: 18g
30	10000/10000h - DE/NDE: 21g
37	10000/10000h - DE/NDE: 21g
45	Not available
55	5000/5000h - DE/NDE: 27g
75	5000/5000h - DE/NDE: 27g

* inlet pressure < 10 bar (145 psi)

Recommended grease types:

Mobil	POLYREX EM 103

It is important to observe the technical data during installation, operation and maintenance.
Inform personnel about the technical data.

Table 1. Sterling NEMA motors

Motor RPM	Frame VS. HP	Type of service	
		Standard 8 hrs/day	Heavy duty 24 hrs/day
3600	143T - 286TS 1.5 - 30	*	*
	324TS - 455TS 40 - 150	6 Months	2 Months
1800	143T - 256T 1 - 20	*	*
	284T - 326T 25 - 50	4 Years	18 Months
	364T - 445T 60 - 150	9 Months	3 Months
1200	143T - 256T 0.75 - 10	*	*
	284T - 326T 15 - 30	4 Years	18 Years
	364T - 445T 40 - 125	1 Year	4 Months

* Motors of this size do not usually have bearings that can be re-lubricated.
These bearings should be replaced at least every 5 years for 8 hr/day service, or every 2 years for 24 hr/day service.

Warning: The bearing grease used must be Klüber NBU-15 - DO NOT SUBSTITUTE!

Table 2. Baldor NEMA motors

Motor RPM	Frame	Type of service	
		Standard 8 hrs/day	Severe >16 hrs/day
3600	- 210	5500 hrs	2750 hrs
	> 210 - 280	3600 hrs	1800 hrs
	> 280 - 360	2200 hrs	1100 hrs
	> 360 - 449	2200 hrs	1100 hrs
1800	- 210	12000 hrs	6000 hrs
	> 210 - 280	9500 hrs	4750 hrs
	> 280 - 360	7400 hrs	3700 hrs
	> 360 - 449	3500 hrs	1750 hrs
1200	- 210	18000 hrs	9000 hrs
	> 210 - 280	15000 hrs	7500 hrs
	> 280 - 360	12000 hrs	6000 hrs
	> 360 - 449	7400 hrs	3700 hrs

Recommended grease forgeneral applications: Polyrex EM (Exxon Mobil)
For other grease types, grease amounts and/or duty conditions please refer to the Baldor Instruction manual.

6 Technical data

It is important to observe the technical data during installation, operation and maintenance.
Inform personnel about the technical data.

6.3 Torque specifications

The table below specifies the tightening torques for the screws, bolts and nuts in this pump.

Always use the torques specified below if no other values are stated. This can be a matter of personal safety.

Size	Tightening torque	
	Nm	lbf-ft
M8	20	15
M10	40	30
M12	67	49
M14	110	81

6.4 Weight (kg)

Pump Type: LKH Prime UltraPure

Size	Size					
	90		100	112	132	
	1.5kW	2.2kW	3kW	4kW	5.5kW	7.5kW
20	61	63	78	83	100	114

It is important to observe the technical data during installation, operation and maintenance.
Inform personnel about the technical data.

6.5 Noise emission

Pump Type	Sound pressure level (dBA)
LKH-5	60
LKH-10	69
LKH-15	72
LKH-20	70
LKH-25	74
LKH-35	71
LKH-40	75
LKH-45	70
LKH-50	75
LKH-60	77
LKH-70	88
LKH-75	79
LKH-85	86
LKH-90	75
LKH Prime 20	74
LKH-112	70
LKH-113	69
LKH-114	68
LKH-122	75
LKH-123	77
LKH-124	80
SolidC-1	68
SolidC-2	72
SolidC-3	73
SolidC-4	72
MR-166	76
MR-185	82
MR-200	81
MR-300	82
GM	54
FM-OS	61

The above LKH noise levels are the same for LKHPF, LKHI, LKH UltraPure, LKH Evap and LKHex.
The above LKH Prime is the same for LKH Prime UltraPure.
The above SolidC noise levels are the same for SolidC UltraPure.

The noise measurements have been carried out with the original motor and shroud, approximately at the Best Efficiency Point (BEP) with water at ambient temperature and at 50Hz.

6 Technical data

It is important to observe the technical data during installation, operation and maintenance.
Inform personnel about the technical data.

Often the noise level generated by the flow through the process system (eg. valves, pipes, tanks etc.) is much higher than that generated by the pump itself. Therefore it is important to consider the noise level from the whole system and take the necessary precautions with regard to personal safety, if required.

The drawing shows the LKH Prime UltraPure pump.

7.1 LKH Prime UltraPure

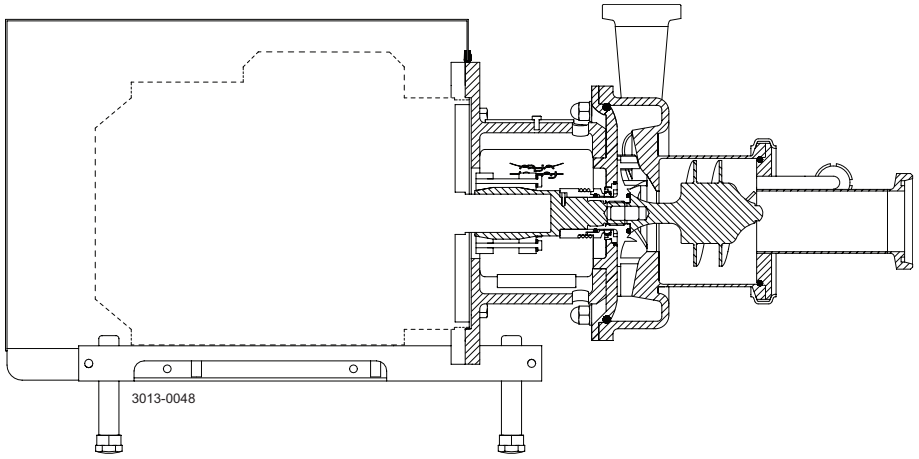

LKH Prime UltraPure

US legs are different to those shown. For further information, see US spare parts.

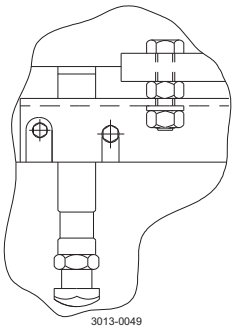

Only used for 3 kW
Fitting of legs

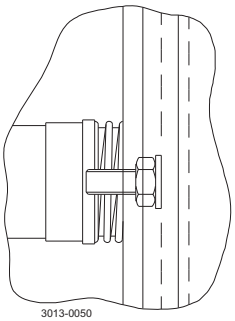

Fitting of back plate

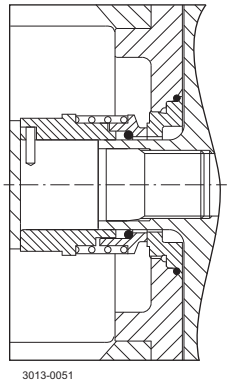

Single shaft seal

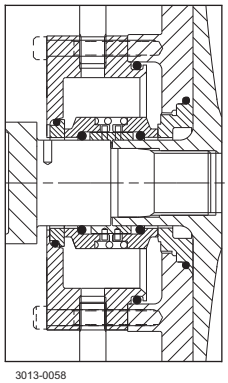

Double mechanical shaft seal

7 Part list and service kits

The drawing shows the LKH Prime UltraPure pump.

7.2 LKH Prime UltraPure 20 - Product wetted parts

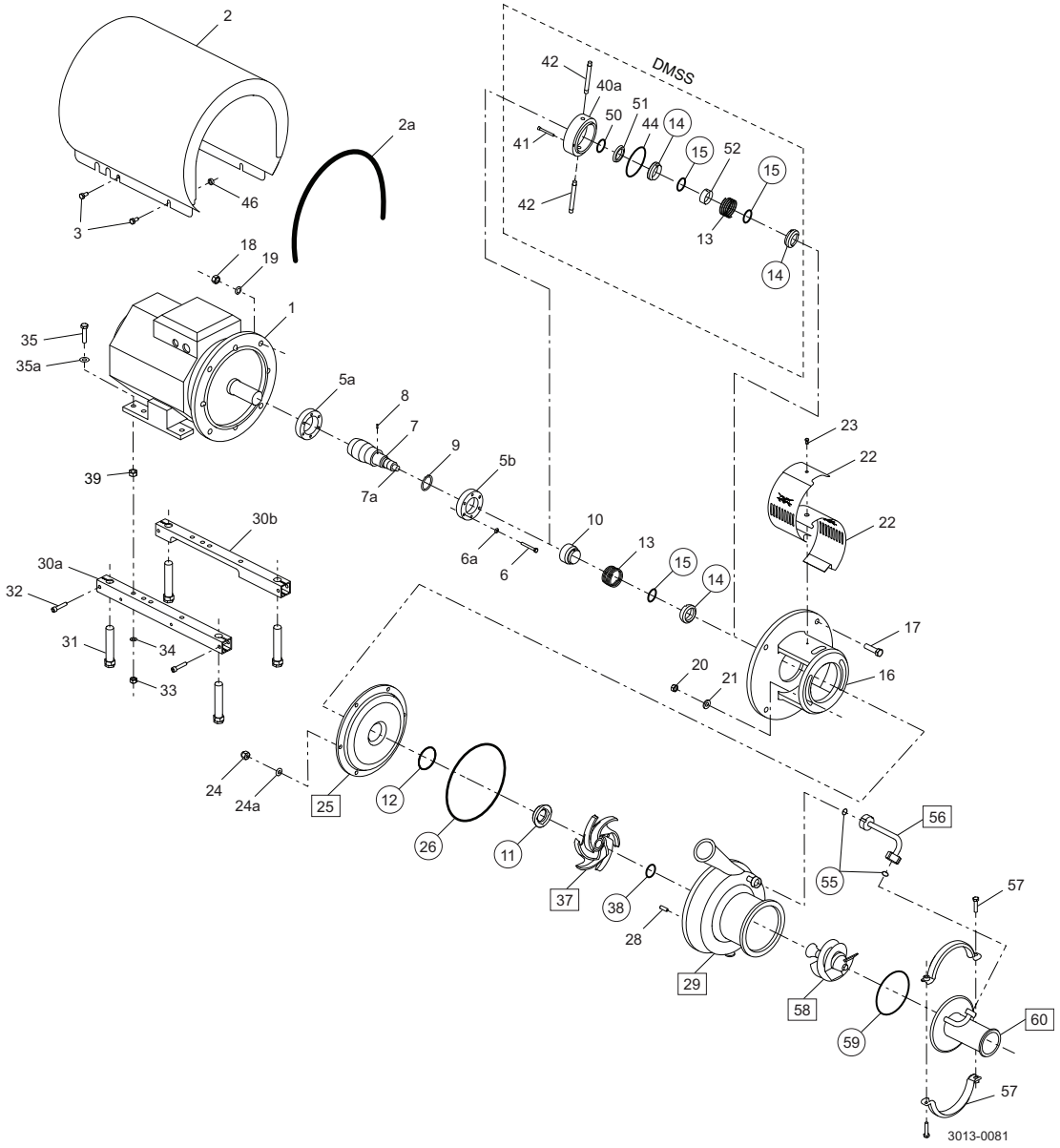

○ Product wetted non-metallic parts

□ Product wetted metallic parts

The drawing shows the LKH Prime UltraPure pump.

Parts list

Pos.		Qty	Denomination
20		1	Nut
21		2	Washer
24		6	Cap nut
24a		6	Washer
25		1	Backplate compl
26	♦●	1	Pumcasing O-ring
28		6	Bolt
29		1	Mech Ra ≤ 0.8
36		1	Impeller
38	♦●	1	O-ring impeller
55	♦●	2	O-ring
56		1	Recirculation pipe
57		1	Clamp set
58		1	Air screw
59	♦●	1	O-ring
60		1	Cover compl.

7 Part list and service kits

The drawing shows the LKH Prime UltraPure pump.

7.3 LKH Prime UltraPure 20 - Motor-dependent parts

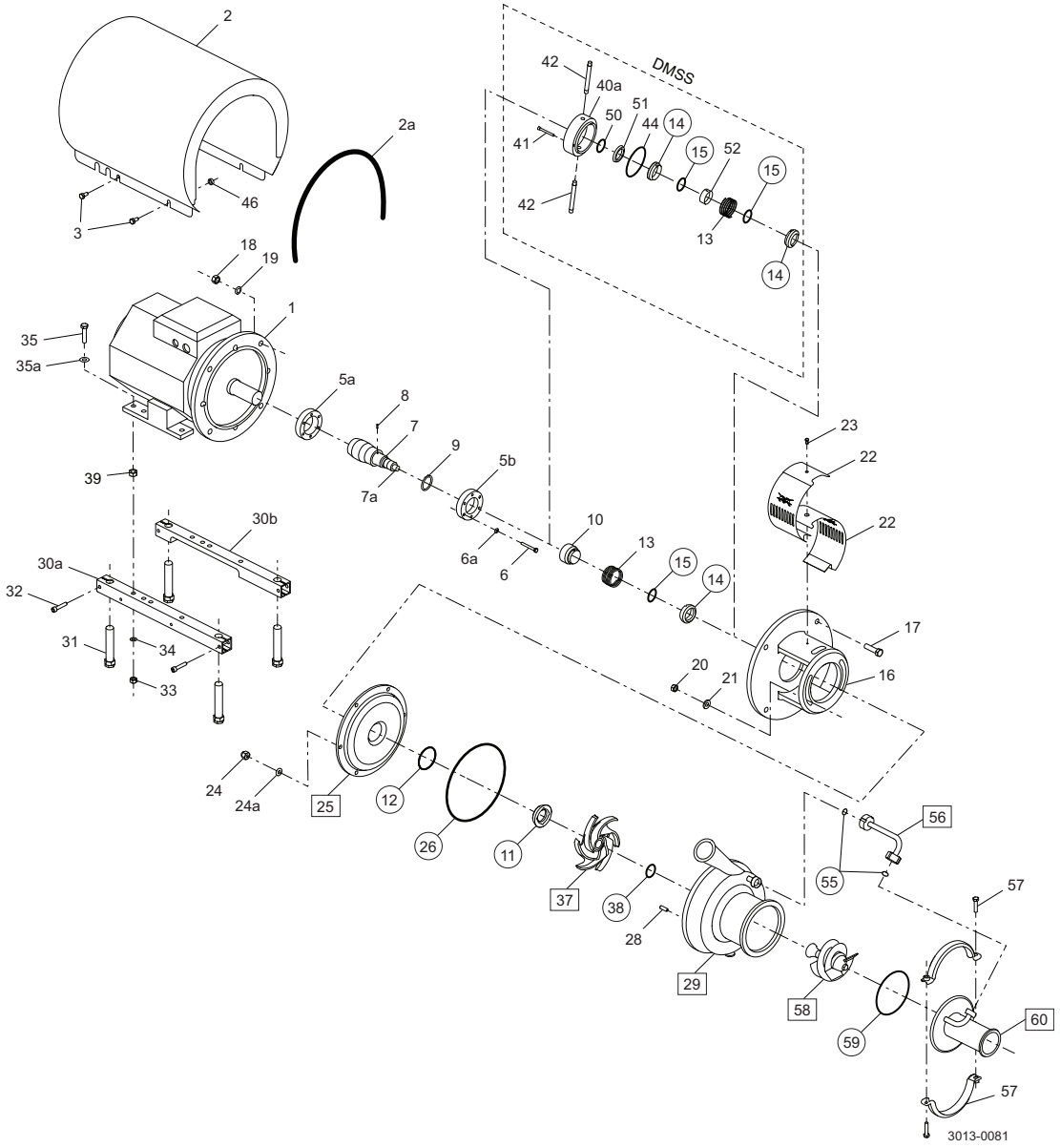

○ Product wetted non-metallic parts

□ Product wetted metallic parts

The drawing shows the LKH Prime UltraPure pump.

Parts list

Pos.	Qty	Denomination
1	1	Motor ABB
2	1	Shroud
3	4	Screw
5a	1	Compression ring
5b	1	Compression ring
6	6	Screw
6a	6	Washer
7	1	Shaft
8	1	Connex pin
9	1	Retaining ring
16	1	Adapter
17	4	Screw for adapter
18	4	Nut for adapter
19	4	Washer for adapter
22	1	Safety guard set
23	1	Screw for safety guard
30a	1	Support bar
30b	1	Support bar
31	4	Legs
32	4	Screw
33	4	Nut
34	4	Spring washer
35	4	Screw
35a	4	Washer
39	4	Nut
46	4	Distance sleeve

7 Part list and service kits

The drawing shows the LKH Prime UltraPure pump.

7.4 LKH Prime UltraPure 20 - Shaft seal

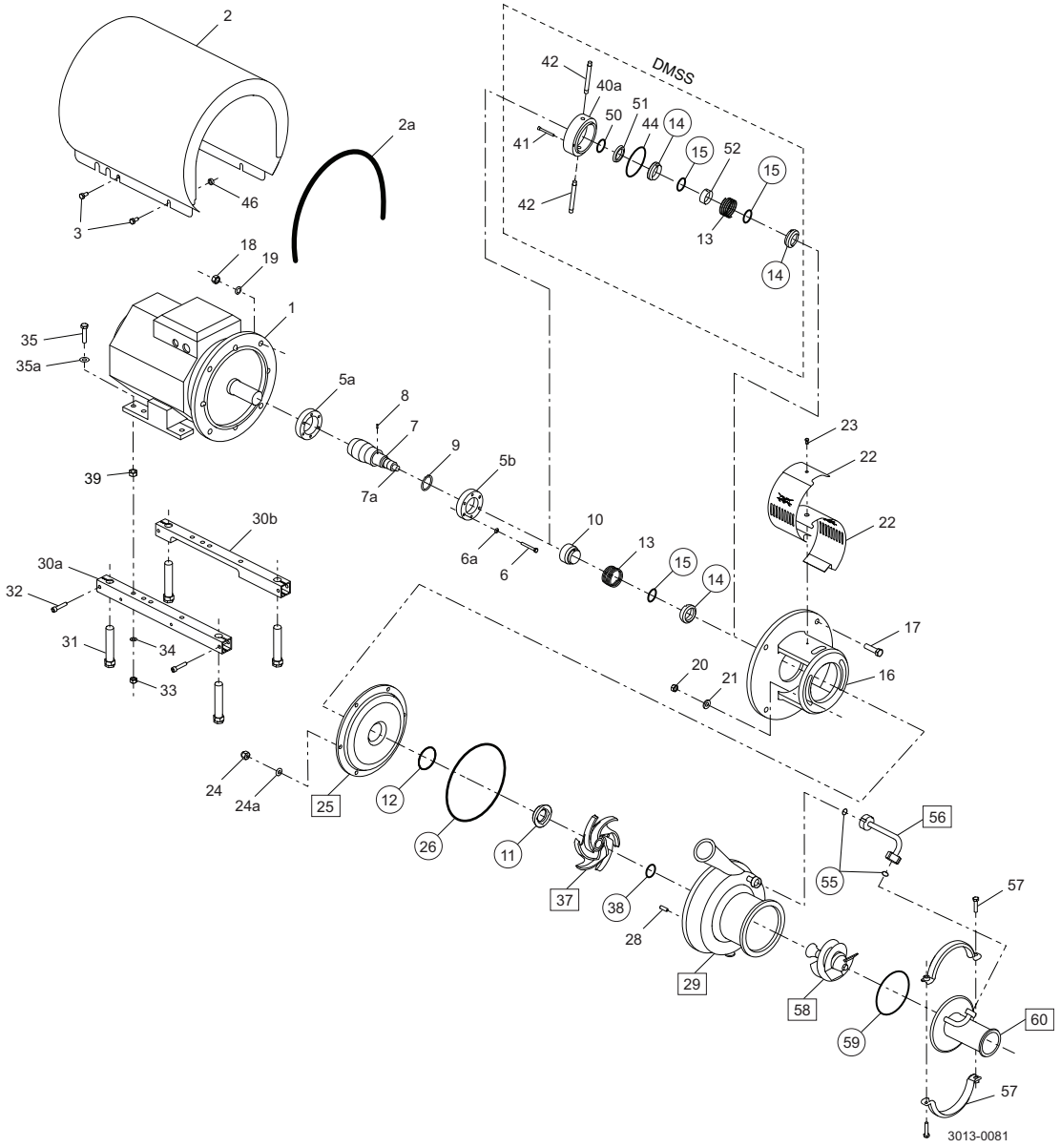

○ Product wetted non-metallic parts

▭ Product wetted metallic parts

The drawing shows the LKH Prime UltraPure pump.

Parts list

Pos.	Qty	Denomination
	1	Tool complete
♦		Single shaft seal
●		Double mechanical shaft seal
10	1	Drive ring
11	1	Stationary seal ring
12	1	O-ring
13	1	Spring
14	1	Rotating seal ring
15	1	O-ring
40a	1	Seal housing
41	2	Screw for seal housing
42	2	Fittings
44	1	O-ring for seal housing
50	1	O-ring
51	1	Sec. stationary seal ring
52	1	Drive ring

Service kits

	Denomination	EPDM	FPM
Service kit for single shaft seal			
♦	Service kit LKH Prime UltraPure 20 (incl. Q-doc)	9611927187	9611927188
Service kit for double mechanical shaft			
●	Service kit LKH Prime UltraPure 20 (incl. Q-doc)	9611927189	9611927190

Parts marked with ♦● are included in the service kits.
Conversion kit single to double mechanical shaft seal : Please order double mechanical service kit + pos. 40a + 41 + 42.
Recommended spare parts: Service kits.

(900689/1)

How to contact Alfa Laval
Contact details for all countries are
continually updated on our website.
Please visit www.alfalaval.com to access the information directly.

© Alfa Laval Corporate AB
This document and its contents is owned by Alfa Laval Corporate AB and protected by laws governing intellectual property and thereto related rights. It is the responsibility of the user of this document to comply with all applicable intellectual property laws. Without limiting any rights related to this document, no part of this document may be copied, reproduced or transmitted in any form or by any means (electronic, mechanical, photocopying, recording, or otherwise), or for any purpose, without the expressed permission of Alfa Laval Corporate AB. Alfa Laval Corporate AB will enforce its rights related to this document to the fullest extent of the law, including the seeking of criminal prosecution.