Spare Parts

Alfa Laval Agitator - ALT / ALTB

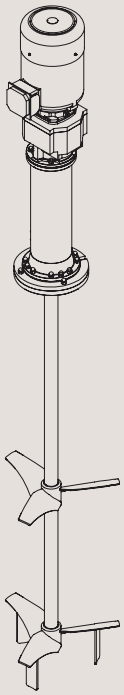

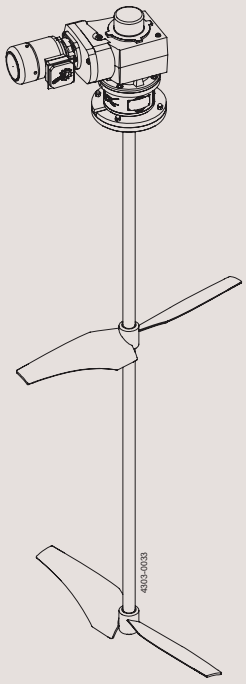

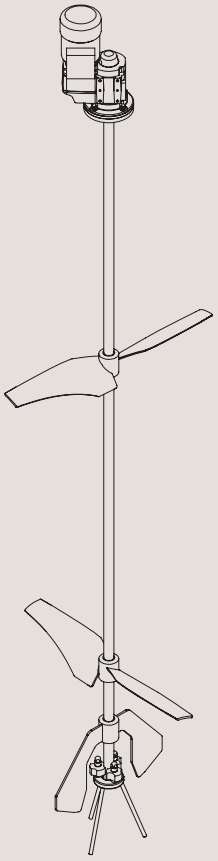

ESE03505-EN2 2017-03

Original manual

Table of contents

The information herein is correct at the time of issue but may be subject to change without prior notice

1. Agitator Main Components, Drive end 4
2. Agitator Main Components, Wet end 6
3. Bearing frame, B20, B25, B25/30, B35, B35/40, B45, B45/50, B55, B55/60 8
4. Bearing frame BC160/35, BC160D/30, BC160DH/30 10
5. Shaft seal, type S 12
6. Shaft seal, type S3 14
7. Shaft seal, type D 16
8. Shaft seal, type DC 18
9. Shaft seal, type R 20
10. Shaft seal, type G 22
11. Shaft seal, type V 24
12. Intermediate steady bearing support 26
13. Bottom steady bearing support, type 1 28
14. Bottom steady bearing support, type 2 30

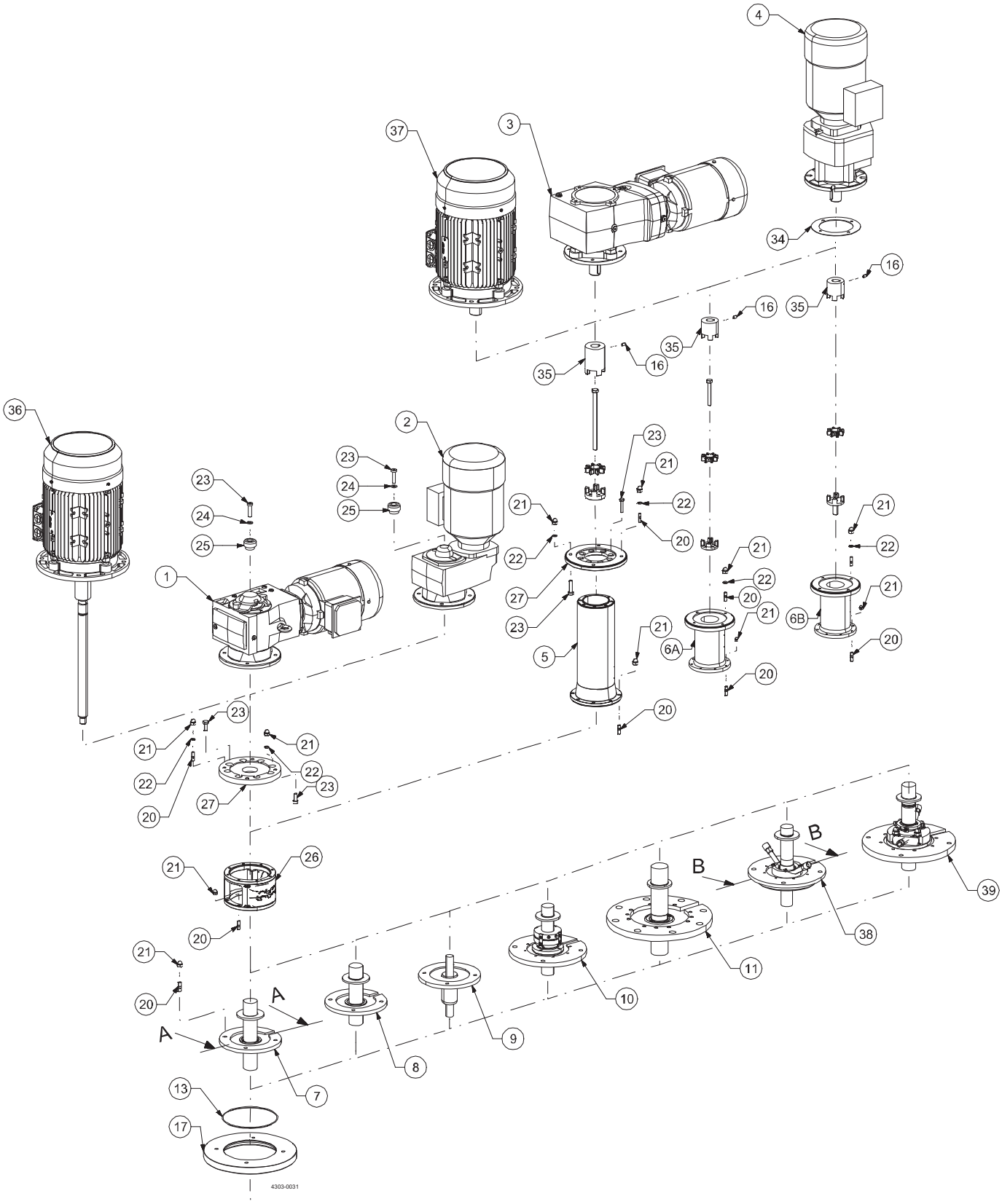
4
37
3
34
16
35
36
2
23
24
25
21
22
20
27
1
5
6A
6B
26
A
B
39
38
11
10
9
8
7
13
17
4303-0031

Pos		Qty	Denomination	Impeller seal	Flange seal
1	□	1	GR gear motor, hollow shaft		
2	□	1	GP gear motor, hollow shaft		
3	□	1	GR gear motor, output shaft		
4	□	1	GC gear motor, output shaft		
5	◆	1	Bearing frame B20, B25, B25/30, B35, B35/40, B45, B45/50, B55, B55/60		
6	◆	1	Bearing frame, BC160/35, BC160D/30, BC160DH/30		
7	◆	1	Shaft seal type R		
8	◆	1	Shaft seal type G		
9	◆	1	Shaft seal type V		
10	◆	1	Shaft seal type S		
11	◆	1	Shaft seal type S3		
38	◆	1	Shaft seal type D		
39	◆	1	Shaft seal type DC		
13		1	O-ring, Ø58,74x3,53 FEP (for flange OD2=134, std)		TE2601000078
		1	O-ring, Ø58,74x3,53 FEP (for flange OD2=134, raised)		TE2601000078
		1	O-ring, Ø58,74x3,53 FEP (for flange OD2=140, std)		TE2601000078
		1	O-ring, Ø58,74x3,53 FEP (for flange OD2=160, std)		TE2601000078
		1	O-ring, Ø139x3,53 FEP (for flange OD2=200, std)		TE2601000073
		1	O-ring, Ø139x3,53 FEP (for flange OD2=200, raised)		TE2601000073
		1	O-ring, Ø139x3,53 FEP (for flange OD2=220, std)		TE2601000073
		1	O-ring, Ø164,3x5,70 EPDM (for flange OD2=225, raised)		TE2601000146
		1	O-ring, Ø164,3x5,70 FPM (for flange OD2=225, raised)		TE2601000679
		1	O-ring, Ø174x3,53 FEP (for flange OD2=230, std)		TE2601000074
		1	O-ring, Ø174x3,53 FEP (for flange OD2=250, std)		TE2601000074
		1	O-ring, Ø189x3,53 FEP (for flange OD2=250, raised)		TE2601000396
		1	O-ring, Ø174x3,53 FEP (for flange OD2=285, std)		TE2601000074
		1	O-ring, Ø202,79x3,53 FEP (for flange OD2=285, std)		TE2601000550
		1	O-ring, Ø233x3,53 FEP (for flange OD2=300, std)		TE2601000075
		1	O-ring, Ø234,3x6,99 EPDM (for flange OD2=300, std)		TE2601000371
		1	O-ring, Ø234,3x6,99 FPM (for flange OD2=300, std)		TE2601000412
		1	O-ring, Ø259x3,53 FEP (for flange OD2=325, std)		TE2601000076
		1	O-ring, Ø233x3,53 FEP (for flange OD2=340, std)		TE2601000075
		1	O-ring, Ø259x3,53 FEP (for flange OD2=342,9, std)		TE2601000076
		1	O-ring, Ø259x3,53 FEP (for flange OD2=350, std)		TE2601000076
		1	O-ring, Ø311x3,53 FEP (for flange OD2=395, std)		TE2601000163
		1	O-ring, Ø311x3,53 FEP (for flange OD2=400, std)		TE2601000163
		1	O-ring, Ø311x3,53 FEP (for flange OD2=406,4, std)		TE2601000163
		1	O-ring, Ø311x3,53 FEP (for flange OD2=445, std)		TE2601000163
		1	O-ring, Ø363x3,53 FEP (for flange OD2=450, std)		TE2601000164
		1	O-ring, Ø444x3,53 FEP (for flange OD2=550, std)		TE2601000571
16	□		Screw, pointed		
17	□	1	Welding flange		
18	□	1	Mounting flange, standard		
19	□	1	Mounting flange, raised		
20	□		Stud		
21	□		Cap nut		
22	□		Washer		
23	□		Screw		
24	□	1	Washer, Nord Lock		
25	□	1	Fixing element		
26	□	1	Lantern, complete		
27	□	1	Drive unit flange		
34	□	1	Disc spacer		
35	□	1	Coupling		
36	□	1	Motor and shaft unit		
37	□	1	Motor		

□ Article number available upon request by serial number or article number of the agitator.

◆ Article number is to be found in the next section matching the specific bearing frame and shaft seal type.

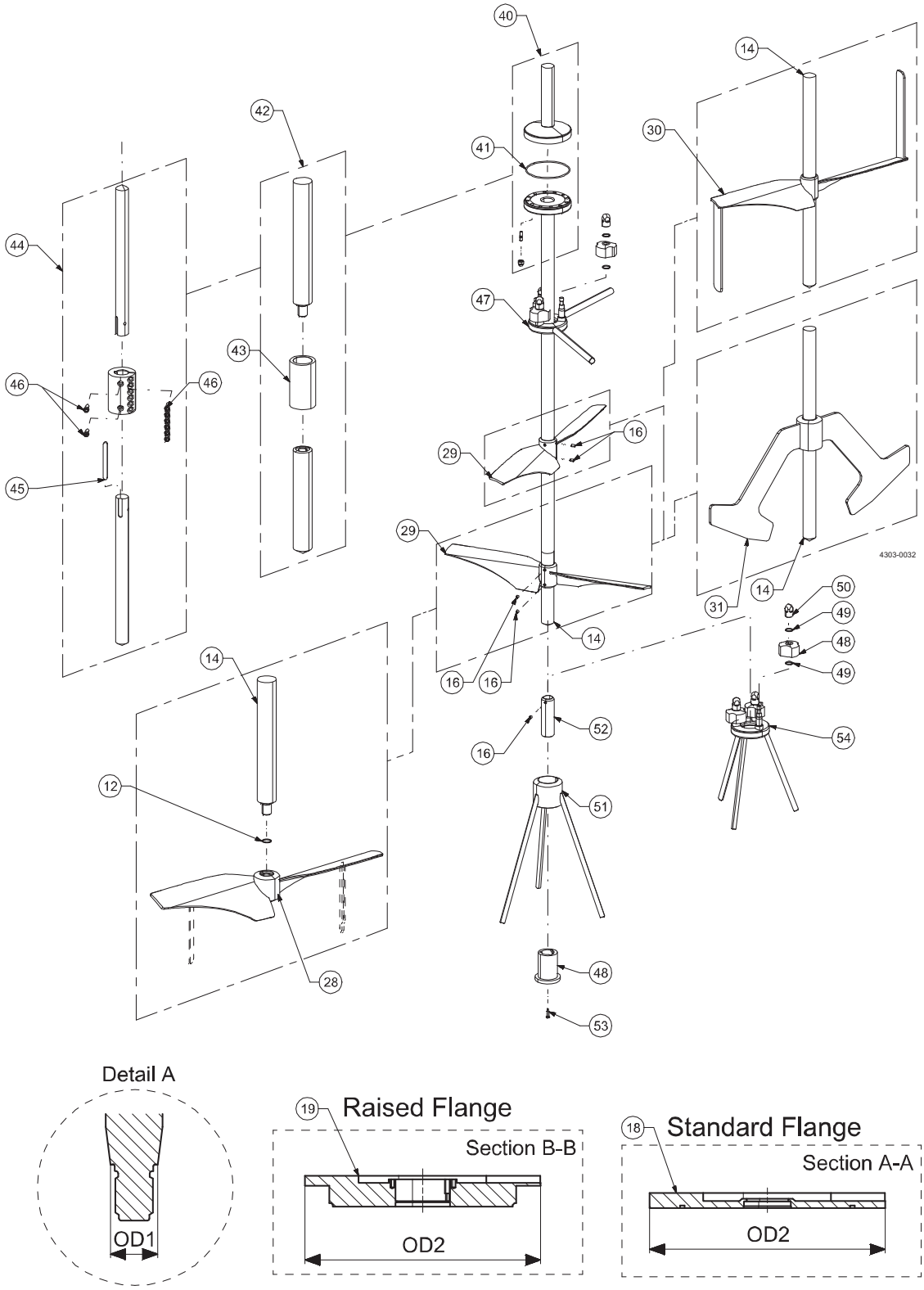
40
14
42
41
30
44
47
43
46
46
16
29
45
29
4303-0032
31
14
50
49
48
49
14
16
16
14
52
54
16
12
51
28
48
53
Detail A
OD1
19
Raised Flange
Section B-B
OD2
18
Standard Flange
Section A-A
OD2

Pos		Qty	Denomination	Impeller seal	Flange seal
12		1	O-ring, Ø19,6x2,4 FEP (for shaft size OD1=25)	TE2601000243	
		1	O-ring, Ø24,6x2,4 FEP (for shaft size OD1=30)	TE2601000244	
		1	O-ring, Ø29,6x2,4 FEP (for shaft size OD1=35)	TE2601000245	
		1	O-ring, Ø34,6x2,4 FEP (for shaft size OD1=40)	TE2601000246	
		1	O-ring, Ø39,6x2,4 FEP (for shaft size OD1=45)	TE2601000247	
		1	O-ring, Ø44,6x2,4 FEP (for shaft size OD1=50)	TE2601000248	
		1	O-ring, Ø49,6x2,4 FEP (for shaft size OD1=55)	TE2601000249	
		1	O-ring, Ø54,6x2,4 FEP (for shaft size OD1=60)	TE2601000250	
		1	O-ring, Ø59,6x2,4 FEP (for shaft size OD1=65)	TE2601000189	
		1	O-ring, Ø64,6x2,4 FEP (for shaft size OD1=70)	TE2601000609	
		1	O-ring, Ø69,6x2,4 FEP (for shaft size OD1=75)	TE2601000610	
		1	O-ring, Ø74,6x2,4 FEP (for shaft size OD1=80)	TE2601000611	
		1	O-ring, Ø84,6x2,4 FEP (for shaft size OD1=90)	TE2601000612	
14	❑	1	Shaft		
15	❑	1	Parrallel key		
16	❑		Screw, pointed		
28	❑	1	Impeller device, EnSaFoil (ESF or ESFL), w. thread		
29	❑	1-10	Impeller device, EnSaFoil, (ESF or ESFL), w. screws or welded		
30	❑	1-10	Impeller device, EnSaFerm, (ESFm), w. screws or welded		
31	❑	1	Impeller device, Low level, (LLI), w. screws or welded		
40	◆	1	Shaft and coupling unit		
41		1	O-ring, Ø139x3,53 FEP (for shaft Ø25-Ø60)	TE2601000073	
		1	O-ring, Ø189x3,53 FEP (for shaft Ø65-Ø90)	TE2601000396	
42	❑		Welded shaft coupling		
43	❑		Sleeve for welded shaft coupling		
44	❑		Sleeve coupling		
45	❑		Parrallel key for sleeve coupling		
46	❑		Screw		
47	◆		Intermediate steady bearing support		
48	◆		Bushing, PTFE		
49	◆		O-ring		
50	◆		Nut, special		
51	◆		Bottom steady bearing support, type 1		
52	◆		Wear sleeve		
53	◆		Screw, special		
54	◆		Bottom steady bearing support, type 2		

❑ Article number available upon request by serial number or article number of the agitator.

◆ Article number is to be found in the next section matching the specific bearing frame and shaft seal type.

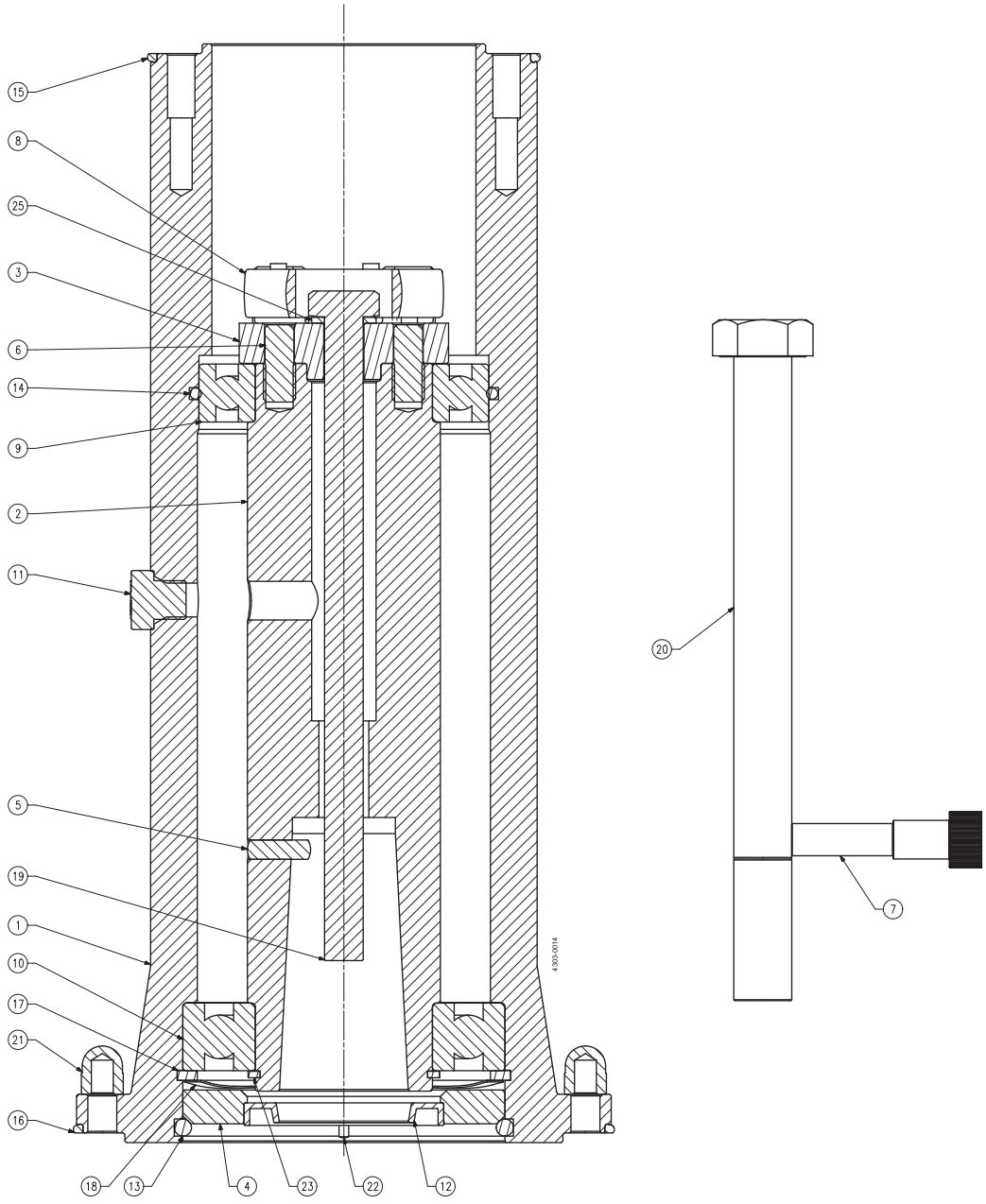
15
8
25
3
6
14
9
2
11
5
19
1
10
17
21
16
18
13
4
23
22
12
20
7
4305-0014

Bearing frame, B20, B25, B25/30, B35, B35/40, B45, B45/50, B55, B55/60

Pos		Qty	Denomination	B20	B25	B25/30	B35
1		1	Bearing frame - housing				
2		1	Drive shaft				
3		1	Coupling				
4		1	Cover				
5		1	Pin				
6		2	Pin				
7		1	Tool, retainer bolt				
8	□	1	Spider, PUR	TE2601000351	TE2601000351	TE2601000351	TE2601000352
9	□	1	Bearing	TE2601000120	TE2601000120	TE2601000120	TE2601000121
10	□	1	Bearing	TE2601000122	TE2601000122	TE2601000122	TE2601000123
11	□	1	Air vent valve	TE2601000362	TE2601000362	TE2601000362	TE2601000362
12	□	1	Seal, radial	TE2601000560	TE2601000592	TE2601000318	TE2601000227
13	□	1	O-ring, FPM	TE2601000301	TE2601000301	TE2601000301	TE2601000304
14	□	1	O-ring, FPM	TE2601000300	TE2601000300	TE2601000300	TE2601000302
15	□	1	O-ring, FPM	TE2601000303	TE2601000303	TE2601000303	TE2601000269
16	□	1	O-ring, FPM	TE2601000269	TE2601000269	TE2601000269	TE2601000277
17		1	Circlip, inner				
18		1	Spring, wave				
19		1	Screw				
20		1	Screw				
21		8	Cap nut				
22		2	Pin				
23		1	Circlip, outer				
24		4	Rivet				
25		1	Washer				

				B20	B25	B25/30	B35
Assembly Kit							
	□		Assembly Kit, Bearing frame B20, B25, B25/30, B35	TE261301266B	TE261301267B	TE2613066880	TE261301269C

Pos		Qty	Denomination	B35/40	B45	B45/50	B55	B55/60
1		1	Bearing frame - housing					
2		1	Drive shaft					
3		1	Coupling					
4		1	Cover					
5		1	Pin					
6		2	Pin					
7		1	Tool, retainer bolt					
8	□	1	Spider, PUR	TE2601000352	TE2601000361	TE2601000361	TE2601000353	TE2601000353
9	□	1	Bearing	TE2601000121	TE2601000094	TE2601000094	TE2601000124	TE2601000124
10	□	1	Bearing	TE2601000123	TE2601000093	TE2601000093	TE2601000125	TE2601000125
11	□	1	Air vent valve	TE2601000362	TE2601000362	TE2601000362	TE2601000362	TE2601000362
12	□	1	Seal, radial	TE2601000321	TE2601000322	TE2601000359	TE2601000324	TE2601000325
13	□	1	O-ring, FPM	TE2601000304	TE2601000270	TE2601000270	TE2601000274	TE2601000274
14	□	1	O-ring, FPM	TE2601000302	TE2601000271	TE2601000271	TE2601000273	TE2601000273
15	□	1	O-ring, FPM	TE2601000269	TE2601000276	TE2601000276	TE2601000277	TE2601000277
16	□	1	O-ring, FPM	TE2601000277	TE2601000282	TE2601000282	TE2601000284	TE2601000284
17		1	Circlip, inner					
18		1	Spring, wave					
19		1	Screw					
20		1	Screw					
21		8	Cap nut					
22		2	Pin					
23		1	Circlip, outer					
24		4	Rivet					
25		1	Washer					

				B35/40	B45	B45/50	B55	B55/60
Assembly Kit								
	□		Assembly Kit, Bearing frame B35/40, B45, B45/50, B55, B55/60	TE261304566B	TE261301100B	TE261305434A	TE261301102B	TE2613065530

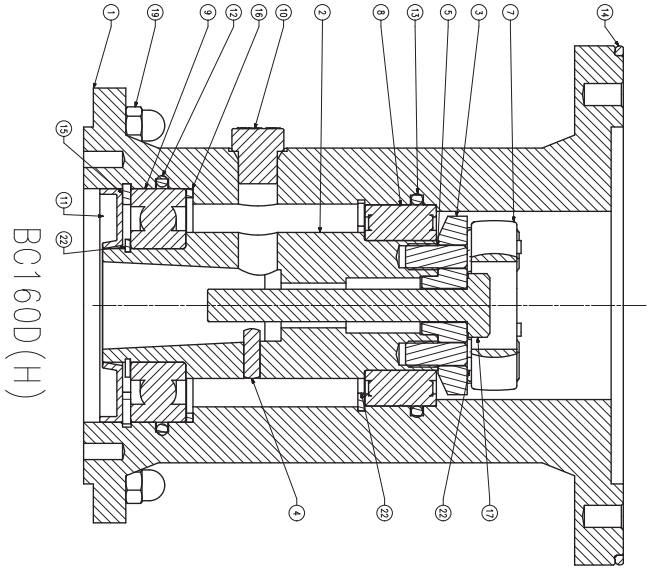
BC160D(H)

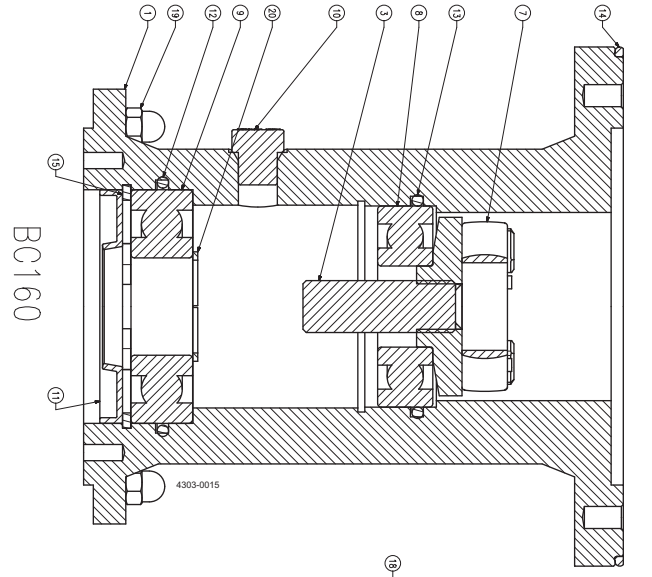
BC160
4303-0015

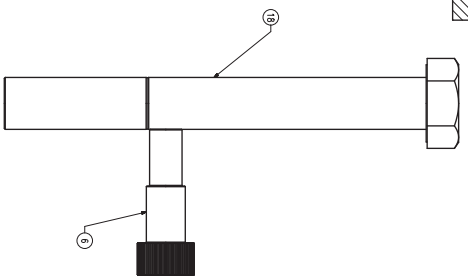

Pos		Qty	Denomination	BC160/35 (right)	BC160/35 (left)	BC160D/30	BC160DH/30
1		1	Bearing frame - housing				
2		1	Drive shaft				
3		1	Coupling				
4		1	Pin				
5		2	Pin				
6		1	Tool, retainer bolt				
7	□	1	Spider, PUR	TE2601000351	TE2601000351	TE2601000351	TE2601000351
8	□	1	Bearing	TE2601000344	TE2601000344	TE2601000127	TE2601000449
9	□	1	Bearing	TE2601000345	TE2601000345	TE2601000126	TE2601000126
10	□	1	Air vent valve	TE2601000362	TE2601000362	TE2601000362	TE2601000362
11	□	1	Seal, radial	TE2601000320	TE2601000320	TE2601000320	TE2601000320
12	□	1	O-ring, FPM	TE2601000138	TE2601000138	TE2601000138	TE2601000138
13	□	1	O-ring, FPM	TE2601000139	TE2601000139	TE2601000139	TE2601000139
14	□	1	O-ring, FPM	TE2601000276	TE2601000276	TE2601000276	TE2601000276
15		1	Circlip, inner				
16		1	Seeger ring				
17		1	Screw				
18		1	Screw				
19		8	Cap nut				
20		1	Circlip, outer				
21		4	Rivet				
22		7	Seeger ring				
		1	Circlip, inner				

				BC160/35 (right)	BC160/35 (left)	BC160D/30	BC160DH/30
Assembly Kit							
	□		Assembly Kit, Bearing frame BC160/35, BC160D/30, BC160DH/30	TE261303783B	TE261303783B	TE261303672B	TE2613071680

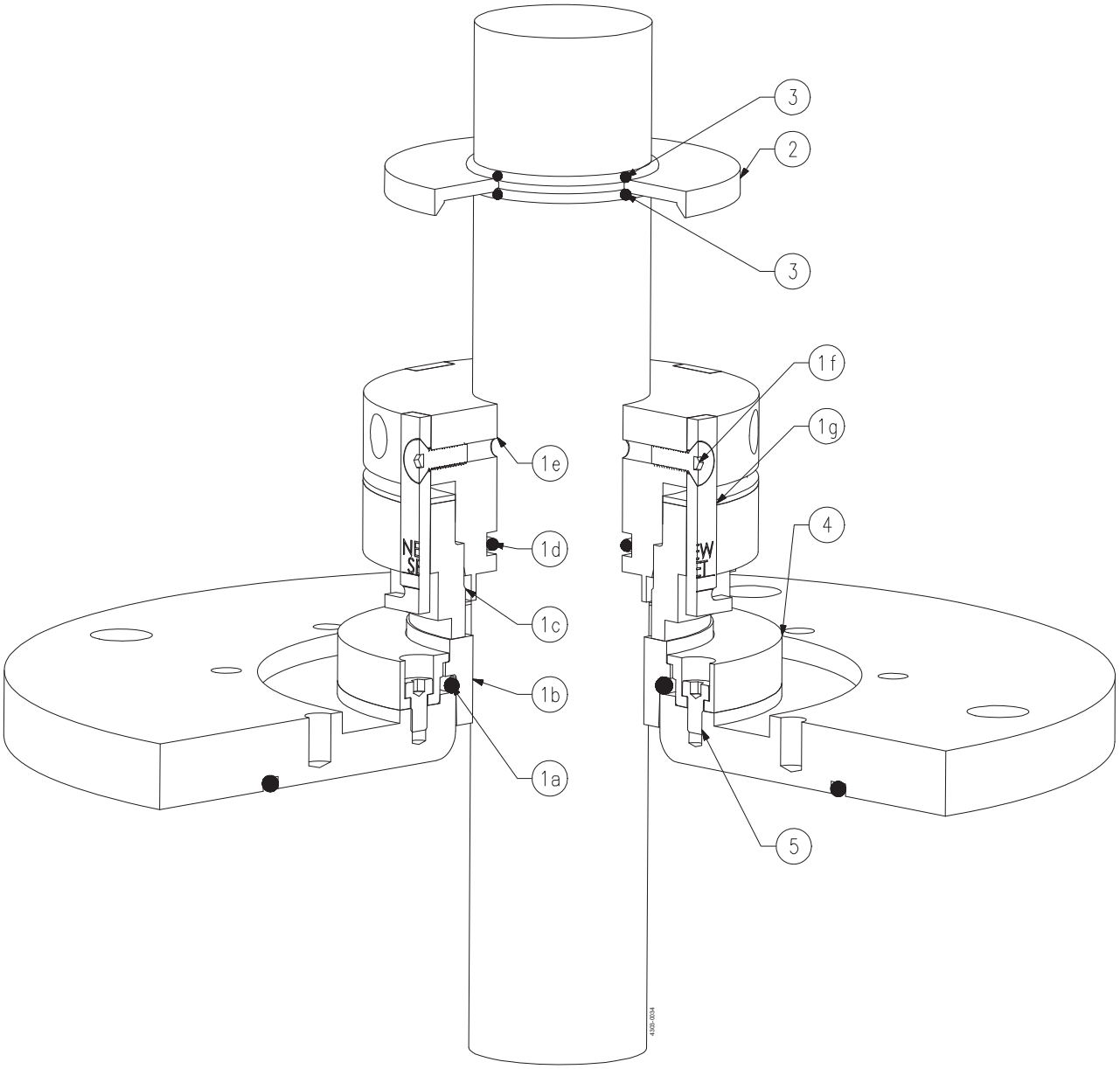
3
2
3
1f
1g
1e
4
1d
1c
1b
1a
5

Shaft seal, type S

Pos		Qty	Denomination	size: Ø30	size: Ø35	size: Ø40	size: Ø45
1	□	1	S seal, C/SiC*, EPDM	TE2602000114	TE2602000105	TE2602000073	TE2602000183
	♦	1	S seal, C/SiC*, FPM	TE2602000176	TE2602000111	TE2602000097	TE2602000181
2		1	Oil trap				
3	□♦	2	O-ring, FPM	TE2601000287	TE2601000289	TE2601000292	TE2601000293
4		1	Ring, retainer	TE260406156C	TE260405177B	TE260405177B	TE260405346B
5		4	Screw	TE2601000326	TE2601000326	TE2601000326	TE2601000326

*The listed article numbes are for the complete seal. The seal-kit contains only the ceramic parts and elastomers.

		size: Ø30	size: Ø35	size: Ø40	size: Ø45
Seal Kits					
□	Seal kit, S, C/SiC, EPDM	TE2613000040	TE2613000041	TE2613000042	TE2613000043
♦	Seal kit, S, C/SiC, FPM	TE2613000031	TE2613000032	TE2613000033	TE2613000034

Pos		Qty	Denomination	size: Ø50	size: Ø60	size: Ø70	size: Ø80
1	□	1	S seal, C/SiC*, EPDM	TE2602000119	TE2602000184	TE2602000206	TE2602000094
	♦	1	S seal, C/SiC*, EPDM	TE2602000089	TE2602000088	TE2602000207	TE2602000182
2		1	Oil trap				
3	□♦	2	O-ring, FPM	TE2601000294	TE2601000297	TE2601000039	TE2601000151
4		1	Ring, retainer	TE260405346B	TE260405344A	TE2604076630	TE260405343A
5		4	Screw	TE2601000326	TE2601000326	TE2601000326	TE2601000326

*The listed article numbes are for the complete seal. The seal-kit contains only the ceramic parts and elastomers.

		size: Ø50	size: Ø60	size: Ø70	size: Ø80
Seal Kits					
□	Seal kit, S, C/SiC, EPDM	TE2613000045	TE2613000046	TE2613000047	TE2613000038
♦	Seal kit, S, C/SiC, FPM	TE2613000035	TE2613000036	TE2613000037	TE2613000048

Pos		Qty	Denomination	size: Ø90
1	□	1	S seal, C/SiC*, EPDM	TE2602000092
	♦	1	S seal, C/SiC*, EPDM	TE2602000211
2		1	Oil trap	
3	□♦	2	O-ring, FPM	TE2601000097
4		1	Ring, retainer	TE260405635A
5		4	Screw	TE2601000326

*The listed article numbes are for the complete seal. The seal-kit contains only the ceramic parts and elastomers.

		size: Ø90
Seal Kits		
□	Seal kit, S, C/SiC, EPDM	TE2613000049
♦	Seal kit, S, C/SiC, FPM	TE2613000039

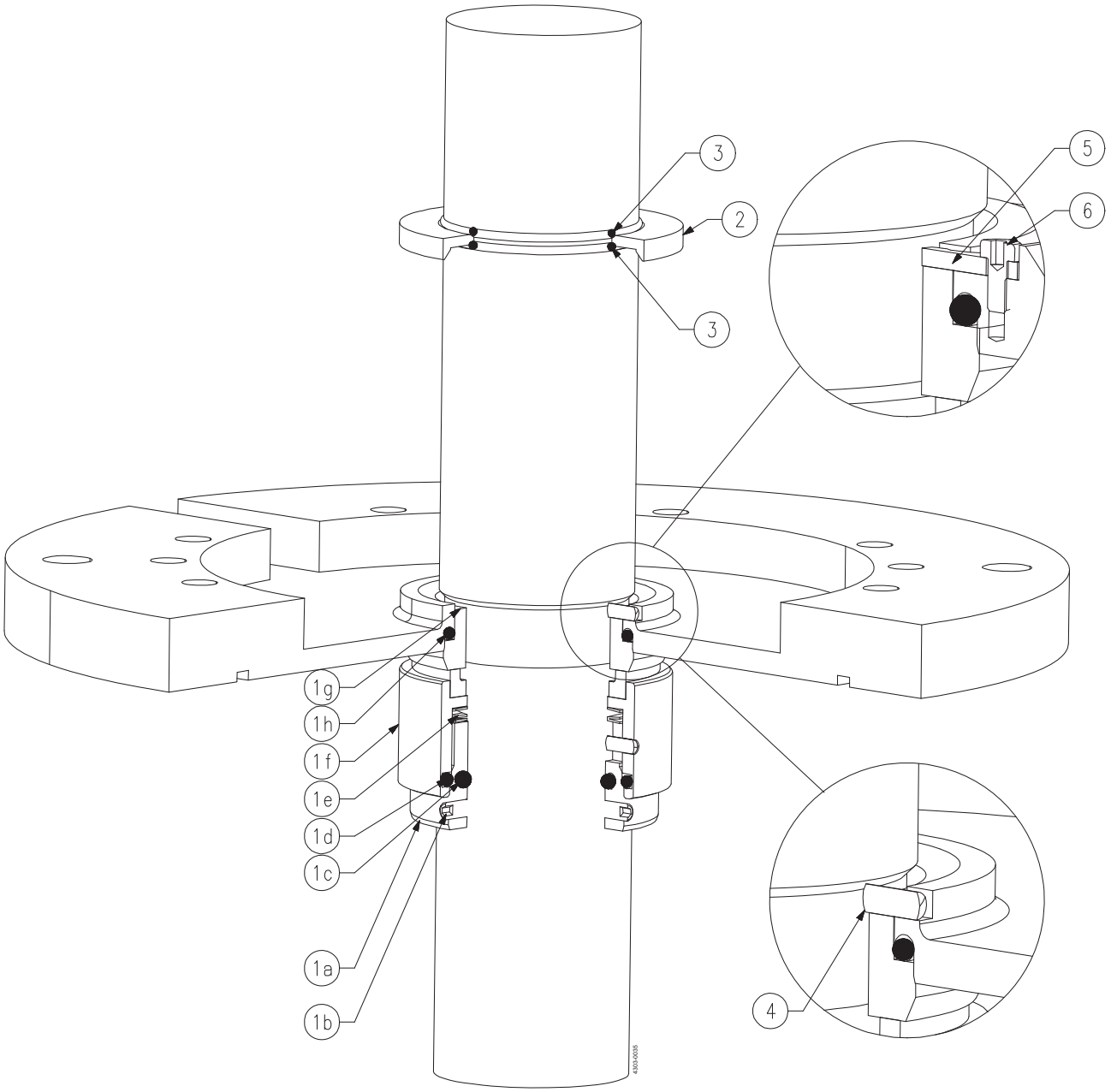
3
2
3
5
6
1g
1h
1f
1e
1d
1c
1a
1b
4
4303-0035

Pos		Qty	Denomination	size: Ø30	size: Ø35	size: Ø40	size: Ø45
1	□	1	S3 seal, C/SiC, EPDM	TE2608000017	TE2608000010	TE2608000024	TE2608000026
	♦	1	S3 seal, C/SiC, FPM	TE2608000018	TE2608000013	TE2608000003	TE2608000027
2		1	Oil trap				
		1	Oil trap, (BC160/35)				
3	□♦	2	O-ring, FPM	TE2601000287	TE2601000289	TE2601000292	TE2601000293
4		1	Locking pin	TE2601000428	TE2601000428	TE2601000428	TE2601000428
5		1	Locking plate	TE2604089540	TE2604089540	TE2604089540	TE2604089540
6		1	Screw	TE2601000572	TE2601000572	TE2601000572	TE2601000572

		size: Ø30	size: Ø35	size: Ø40	size: Ø45
Seal Kits					
□	Seal Kit, S3, C/SiC, EPDM	TE2613000087	TE2613000090	TE2613000091	TE2613000093
♦	Seal Kit, S3, C/SiC, FPM	TE2613000104	TE2613000106	TE2613000107	TE2613000108

Pos		Qty	Denomination	size: Ø50	size: Ø55	size: Ø60	size: Ø65
1	□	1	S3 seal, C/SiC, EPDM	TE2608000028	TE2608000031	TE2608000030	TE2608000034
	♦	1	S3 seal, C/SiC, FPM	TE2608000029	TE2608000032	TE2608000033	TE2608000060
2		1	Oil trap				
3	□♦	2	O-ring, FPM	TE2601000294	TE2601000295	TE2601000297	TE2601000059
4		1	Locking pin	TE2601000428	TE2601000428	TE2601000428	TE2601000428
5		1	Locking plate	TE2604089540	TE2604089540	TE2604089540	TE2604089540
6		1	Screw	TE2601000572	TE2601000572	TE2601000572	TE2601000572

		size: Ø50	size: Ø55	size: Ø60	size: Ø65
Seal Kits					
□	Seal Kit, S3, C/SiC, EPDM	TE2613000095	TE2613000096	TE2613000098	TE2613000099
♦	Seal Kit, S3, C/SiC, FPM	TE2613000109	TE2613000110	TE2613000112	TE2613000113

Pos		Qty	Denomination	size: Ø70	size: Ø75	size: Ø80	size: Ø90
1	□	1	S3 seal, C/SiC, EPDM	TE2608000036	TE2608000038	TE2608000040	TE2608000044
	♦	1	S3 seal, C/SiC, FPM	TE2608000037	TE2608000039	TE2608000041	TE2608000045
2		1	Oil trap				
3	□♦	2	O-ring, FPM	TE2601000039	TE2601000403	TE2601000151	TE2601000097
4		1	Locking pin	TE2601000428	TE2601000428	TE2601000428	TE2601000428
5		1	Locking plate	TE2604089540	TE2604089540	TE2604089540	TE2604089540
6		1	Screw	TE2601000572	TE2601000572	TE2601000572	TE2601000572

		size: Ø70	size: Ø75	size: Ø80	size: Ø90
Seal Kits					
□	Seal Kit, S3, C/SiC, EPDM	TE2613000100	TE2613000101	TE2613000102	TE2613000103
♦	Seal Kit, S3, C/SiC, FPM	TE2613000116	TE2613000117	TE2613000118	TE2613000120

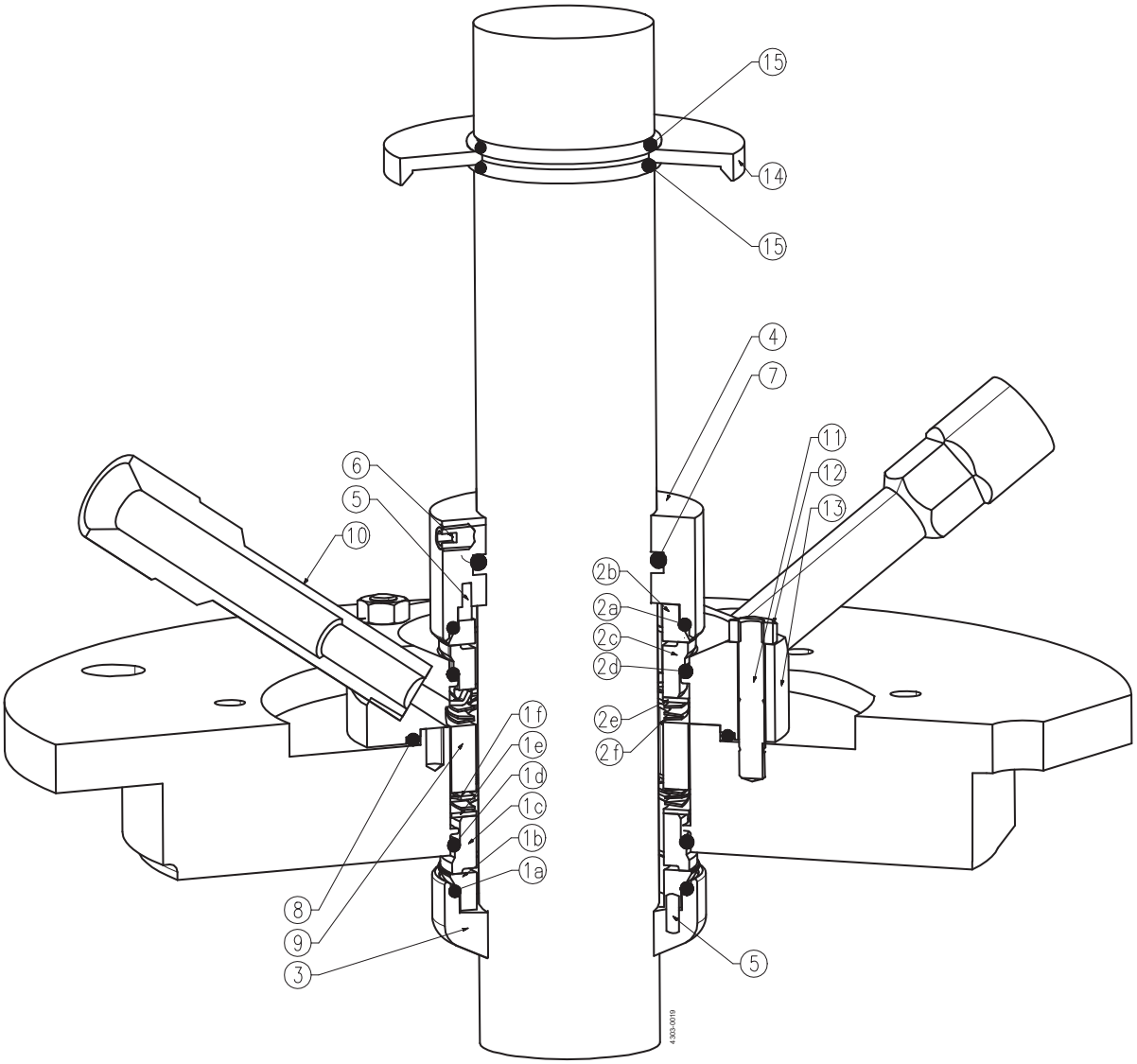
15
14
15
4
7
11
12
13
6
5
10
2b
2a
2c
2d
2e
2f
1f
1e
1d
1c
1b
1a
8
9
3
5
4303-0019

Shaft seal, type D

Pos		Qty	Denomination	size: Ø30	size: Ø40
1	□	1	Seal, C/SiC, EPDM	TE2608041570	TE2608012850
	♦	1	Seal, SiC/SiC, EPDM	TE2608037220	TE2608045750
	○	1	Seal, C/SiC, FPM	TE2608058650	TE2608084680
	★	1	Seal, SiC/SiC, FPM	TE2608049740	TE2608049390
2	♦★	1	Seal, C/SiC, EPDM	TE2608041570	TE2608012850
	□○	1	Seal, C/SiC, FPM	TE2608058650	TE2608084680
3		1	Ring, counter*		
4		1	Ring, counter		
5		4	Pin		
6		1	Screw, pointed		
7	□○	1	O-ring, FPM	TE2601000411	TE2601000040
	♦★	1	O-ring, EPDM	TE2601000001	TE2601000424
8	□○	1	O-ring, FPM	TE2601000450	TE2601000403
	♦★	1	O-ring, EPDM	TE2601000387	TE2601000392
9		1	Spacer, (15mm)		
		1	Spacer, (14mm)		
		1	Spacer, (1mm)		
10		2	Flush, connection		
11		4	Stud		
12		4	Nut		
13		1	Seal housing		
14		1	Oil trap		
15	□♦○★	2	O-ring, FPM	TE2601000287	TE2601000292

* If the counter ring or the shaft needs to be replaced, the maintenance must be carried out by Alfa Laval.

		Ø30	Ø40
Seal kits			
□	**Seal Kit, D, C/SiC-C/SiC, FPM**	**TE2613000121**	**TE2613000122**
♦	**Seal Kit, D, C/SiC-C/SiC, EPDM**	**TE2613000123**	**TE2613000124**
○	**Seal Kit, D, SiC/SiC-C/SiC, FPM**	**TE2613000125**	**TE2613000126**
★	**Seal Kit, D, SiC/SiC-C/SiC, EPDM**	**TE2613000127**	**TE2613000128**

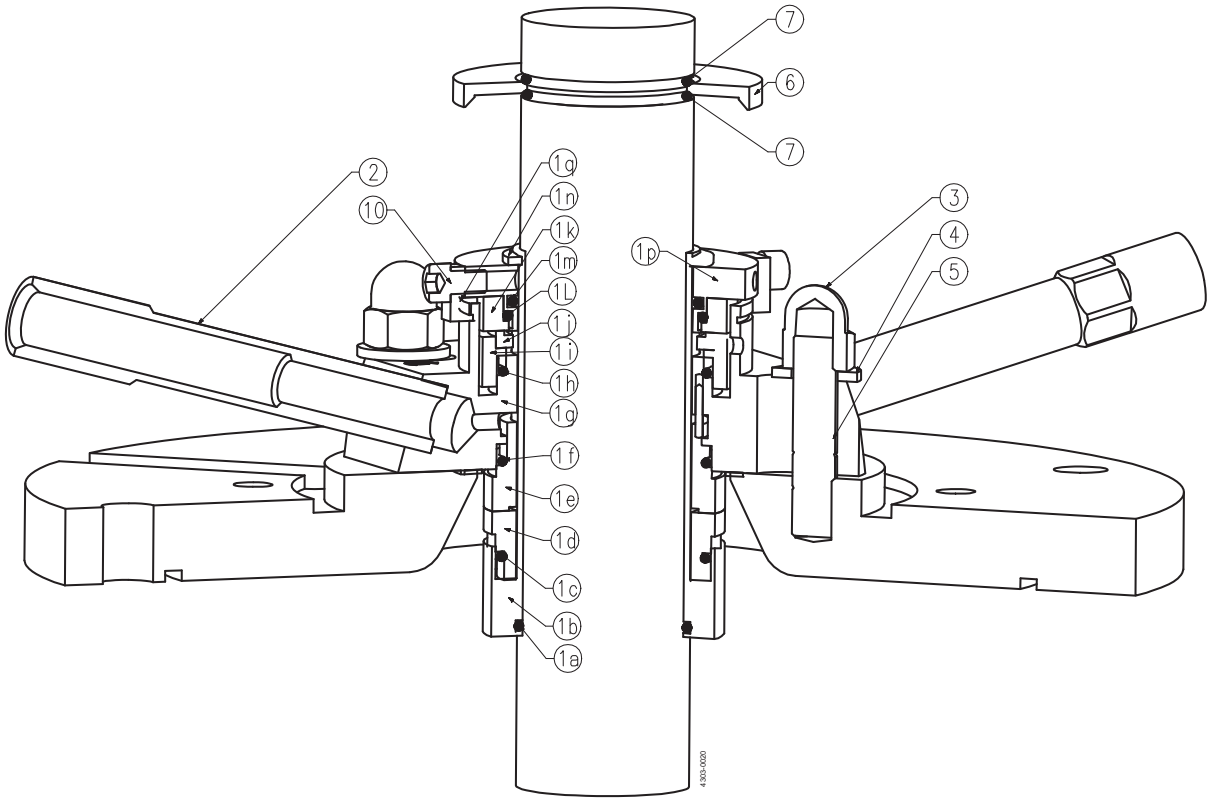
7
6
7
2
10
1g
1n
1k
1m
1L
1j
1i
1h
1g
1f
1e
1d
1c
1b
1a
1p
3
4
5
4303-0020

Pos		Qty	Denomination	size: Ø30	size: Ø35	size: Ø40	size: Ø45
1	□	1	DC seal, C/SiC-C/SiC, EPDM	TE2602000224	TE2602000236	TE2602000091	TE2602000075
	♦	1	DC seal, C/SiC-C/SiC, FPM	TE2602000228	TE2602000239	TE2602000242	TE2602000203
	○	1	DC seal, SiC/SiC-C/SiC, EPDM	TE2602000225	TE2602000237	TE2602000241	TE2602000244
	★	1	DC seal, SiC/SiC-C/SiC, FPM	TE2602000229	TE2602000240	TE2602000243	TE2602000247
2		2	Flush, connection				
3		4	Cap nut, M10				
		4	Cap nut, M12				
4		4	Washer, M10				
		4	Washer, M12				
		4	Washer, special				
5		4	Stud, M10				
		4	Stud, M12				
6		1	Oil trap				
7	□♦○★	2	O-ring, FPM	TE2601000287	TE2601000289	TE2601000292	TE2601000293

	size: Ø30	size: Ø35	size: Ø40	size: Ø45
Seal kits				
□ Seal Kit, DC, C/SiC-C/SiC, EPDM	TE2613000137	TE2613000138	TE2613000139	TE2613000140
♦ Seal Kit, DC, C/SiC-C/SiC, FPM	TE2613000144	TE2613000145	TE2613000146	TE2613000147
○ Seal Kit, DC, SiC/SiC-C/SiC, EPDM	TE2613000151	TE2613000152	TE2613000153	TE2613000154
★ Seal Kit, DC, SiC/SiC-C/SiC, FPM	TE2613000158	TE2613000159	TE2613000160	TE2613000161

Pos		Qty	Denomination	size: Ø50	size: Ø55	size: Ø60
1	□	1	DC seal, C/SiC-C/SiC, EPD	TE2602000189	TE2602000251	TE2602000257
	♦	1	DC seal, C/SiC-C/SiC, FPM	TE2602000249	TE2602000255	TE2602000260
	○	1	DC seal, SiC/SiC-C/SiC, EPD	TE2602000248	TE2602000252	TE2602000202
	★	1	DC seal, SiC/SiC-C/SiC, FPM	TE2602000250	TE2602000256	TE2602000261
2		2	Flush, connection			
3		4	Cap nut, M10			
		4	Cap nut, M12			
4		4	Washer, M10			
		4	Washer, M12, M12			
		4	Washer, special			
5		4	Stud, M10			
		4	Stud, M12			
6		1	Oil trap			
7	□♦○★	2	O-ring, FPM	TE2601000294	TE2601000295	TE2601000297

	size: Ø50	size: Ø55	size: Ø60
Seal kits			
□ Seal Kit, DC, C/SiC-C/SiC, EPDM	TE2613000141	TE2613000142	TE2613000143
♦ Seal Kit, DC, C/SiC-C/SiC, FPM	TE2613000148	TE2613000149	TE2613000150
○ Seal Kit, DC, SiC/SiC-C/SiC, EPDM	TE2613000155	TE2613000156	TE2613000157
★ Seal Kit, DC, SiC/SiC-C/SiC, FPM	TE2613000162	TE2613000163	TE2613000164

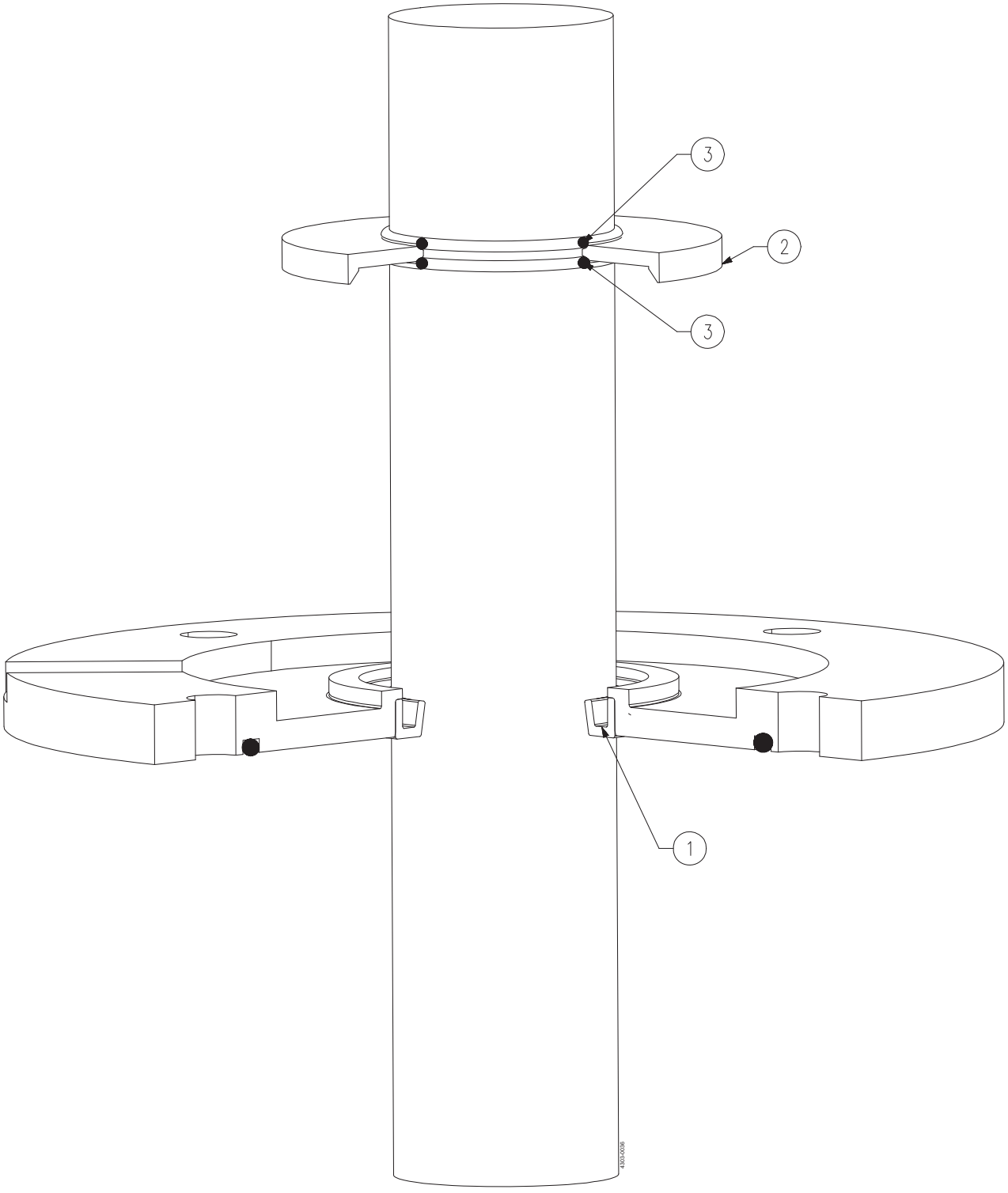
3
2
3
1

Pos		Qty	Denomination	size: Ø20	size: Ø25	size: Ø30	size: Ø35
1	□	1	Radial seal, FPM	TE2601000560	TE2601000592	TE2601000318	
	□	1	Radial seal, FPM (Ø35xØ62x7)				TE2601000227
	♦	1	Radial seal, FPM (Ø35xØ47x7)				TE2601000319
2		1	Oil trap				
3	□♦	2	O-ring, FPM	TE2601000561	TE2601000281	TE2601000287	TE2601000289

	size: Ø20	size: Ø25	size: Ø30	size: Ø35
Seal kits				
□ Seal Kit, Radial, FPM	TE2613000001	TE2613000002	TE2613000003	TE2613000004
♦ Seal Kit, Radial, FPM				TE2613000190

Pos		Qty	Denomination	size: Ø40	size: Ø45	size: Ø50	size: Ø55
1	□	1	Radial seal, FPM				TE2601000324
	□	1	Radial seal, FPM (Ø40xØ72x7)	TE2601000080			
	♦	1	Radial seal, FPM (Ø40xØ62x7)	TE2601000321			
	□	1	Radial seal, FPM (Ø45xØ72x7)		TE2601000380		
	♦	1	Radial seal, FPM (Ø45xØ62x7)		TE2601000322		
	□	1	Radial seal, FPM (Ø50xØ72x7)			TE2601000323	
	♦	1	Radial seal, FPM (Ø50xØ62x7)			TE2601000359	
2		1	Oil trap				
3	□♦	2	O-ring, FPM	TE2601000292	TE2601000293	TE2601000294	TE2601000295

	size: Ø40	size: Ø45	size: Ø50	size: Ø55
Seal kits				
□ Seal Kit, Radial, FPM	TE2613000005	TE2613000006	TE2613000194	TE2613000008
♦ Seal Kit, Radial, FPM	TE2613000192	TE2613000193	TE2613000007	

Pos		Qty	Denomination	size: Ø60	size: Ø65	size: Ø70	size: Ø75
1	□	1	Radial seal, FPM	TE2601000325	TE2601000036	TE2601000161	TE2601000573
2		1	Oil trap				
3	□	2	O-ring, FPM	TE2601000297	TE2601000059	TE2601000039	TE2601000403

	size: Ø60	size: Ø65	size: Ø70	size: Ø75
Seal kits				
□ Seal Kit, Radial, FPM	TE2613000009	TE2613000010	TE2613000011	TE2613000012

Pos		Qty	Denomination	size: Ø80	size: Ø90
1	□	1	Radial seal, FPM	TE2601000170	TE2601000009
2		1	Oil trap		
3	□	2	O-ring, FPM	TE2601000151	TE2601000097

	size: Ø80	size: Ø90
Seal kits		
□ Seal Kit, Radial, FPM	TE2613000013	TE2613000014

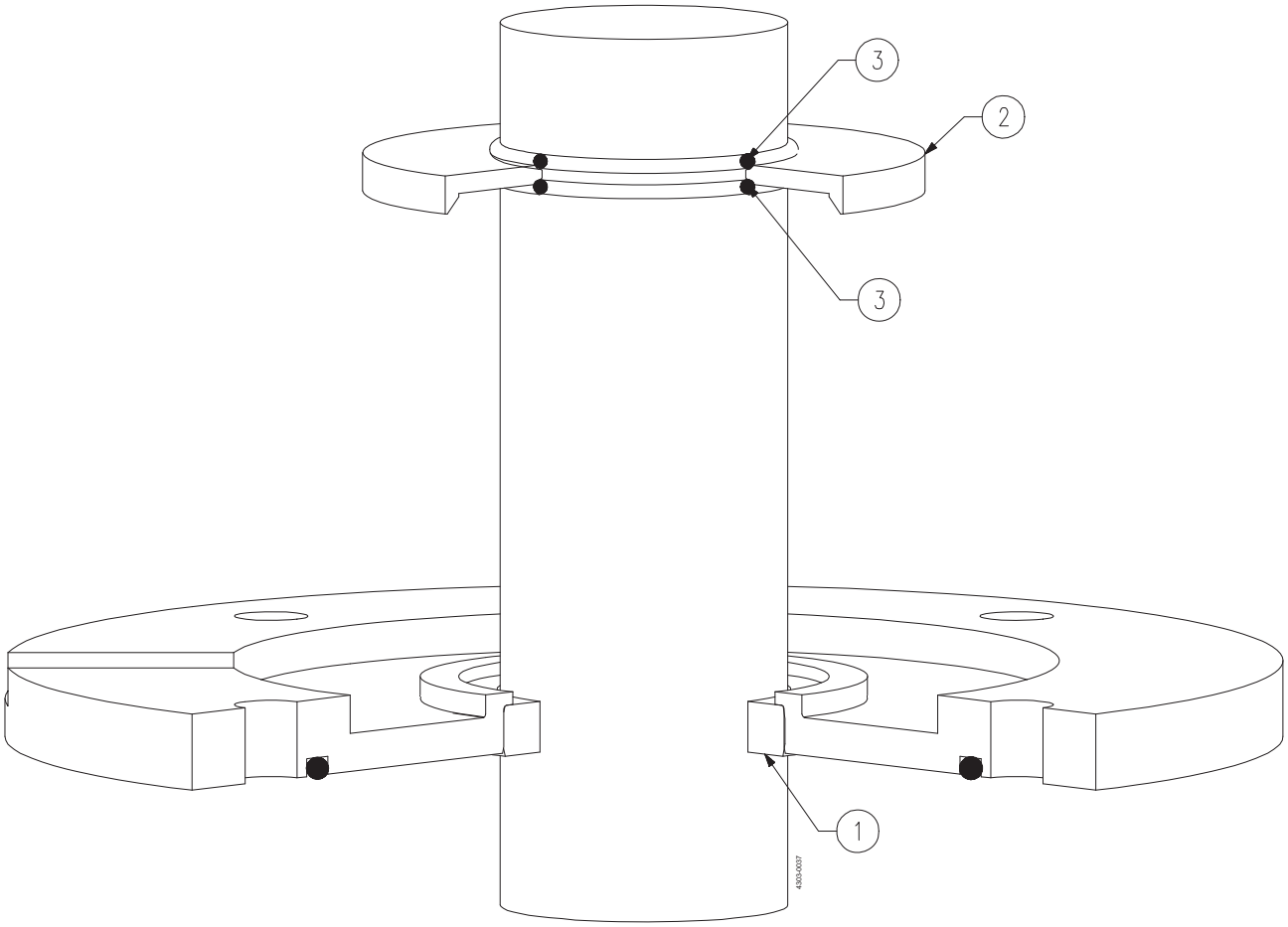
3
2
3
1
4303-0037

Shaft seal, type G

Pos		Qty	Denomination	size: Ø20	size: Ø25	size: Ø30	size: Ø35
1	□	1	Gab seal, PTFE	TE2607049240	TE2607049250	TE2607078250	
	□	1	Gab seal, PTFE(Ø62,50xØ36x8)				TE2607078430
	♦	1	Gab seal, PTFE (Ø47,50xØ36x8)				TE2607047220
2		1	Oil trap				
3	□♦	2	O-ring, FPM	TE2601000561	TE2601000281	TE2601000287	TE2601000289

	size: Ø20	size: Ø25	size: Ø30	size: Ø35
Seal kits				
□ Seal Kit, Gap, PTFE	TE2613000015	TE2613000016	TE2613000017	TE2613000018
♦ Seal Kit, Gap, PTFE				TE2613000195

Pos		Qty	Denomination	size: Ø40	size: Ø45	size: Ø50	size: Ø55
1	□	1	Gab seal, PTFE				TE2607070460
	□	1	Gab seal, PTFE (Ø72,50xØ41x8)	TE2607078270			
	♦	1	Gab seal, PTFE (Ø62,50xØ41x8)	TE2607078440			
	□	1	Gab seal, PTFE (Ø72,50xØ46x8)		TE2607078280		
	♦	1	Gab seal, PTFE (Ø62,50xØ46x8)		TE2607078450		
	□	1	Gab seal, PTFE (Ø72,50xØ51x8)			TE2607078460	
	♦	1	Gab seal, PTFE (Ø62,50xØ51x8)			TE2607078290	
2		1	Oil trap				
3	□♦	2	O-ring, FPM	TE2601000292	TE2601000293	TE2601000294	TE2601000295

	size: Ø40	size: Ø45	size: Ø50	size: Ø55
Seal kits				
□ Seal Kit, Gap, PTFE	TE2613000019	TE2613000020	TE2613000198	TE2613000022
♦ Seal Kit, Gap, PTFE	TE2613000196	TE2613000197	TE2613000021	

Pos		Qty	Denomination	size: Ø60	size: Ø65	size: Ø70	size: Ø75
1	□	1	Gab seal, PFTE	TE2607078300	TE2607078330	TE2607078340	TE2607049260
2		1	Oil trap				
3	□	2	O-ring, FPM	TE2601000297	TE2601000059	TE2601000039	TE2601000403

	size: Ø60	size: Ø65	size: Ø70	size: Ø75
Seal kits				
□ Seal Kit, Gap, PTFE	TE2613000023	TE2613000024	TE2613000025	TE2613000026

Pos		Qty	Denomination	size: Ø80	size: Ø90
1	□	1	Gab seal, PTFE	TE2607078360	TE2607078370
2		1	Oil trap		
3	□	2	O-ring, FPM	TE2601000151	TE2601000097

	size: Ø80	size: Ø90
Seal kits		
□ Seal Kit, Gap, PTFE	TE2613000027	TE2613000028

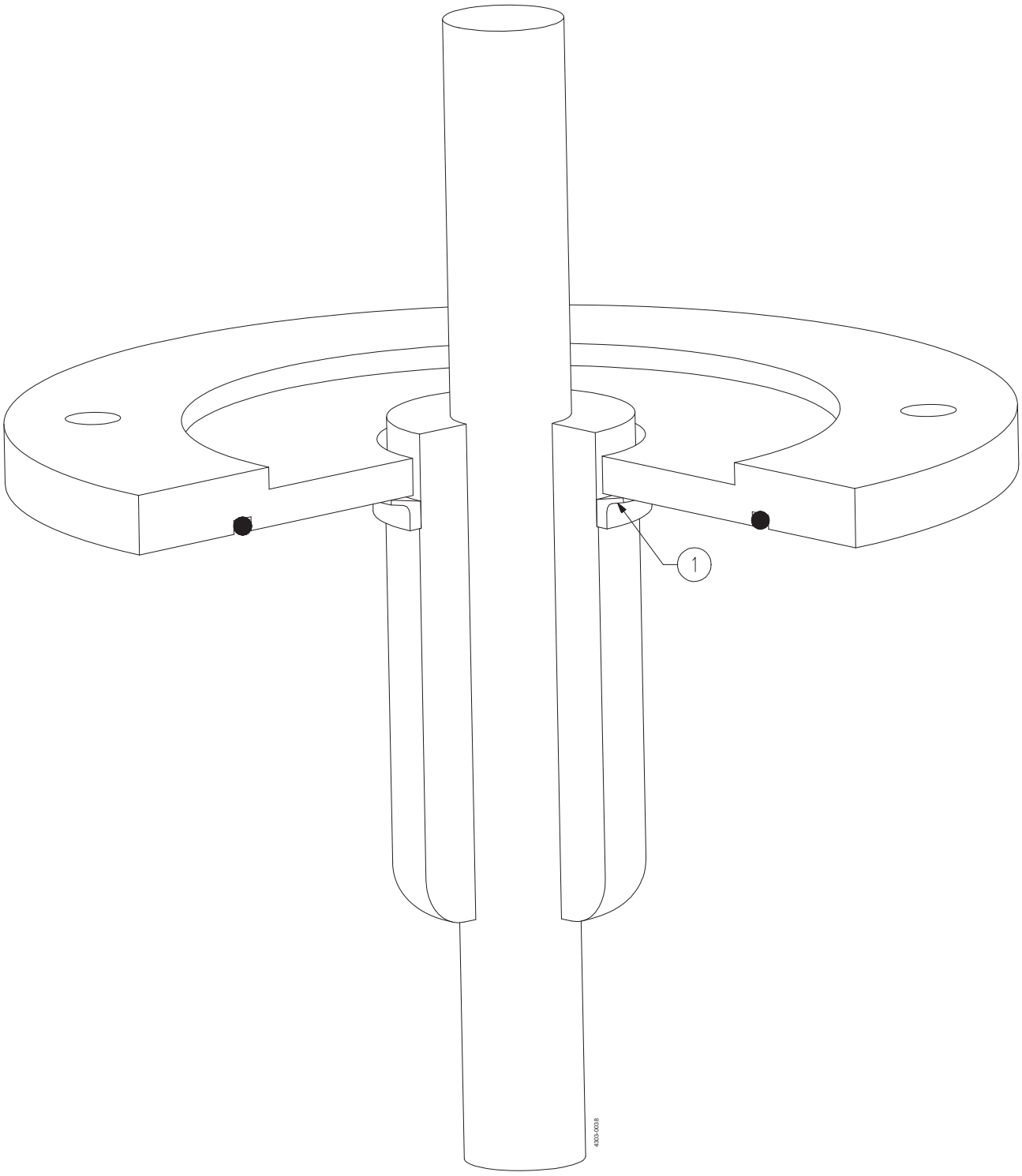
1
4300-003B

Shaft seal, type V

Pos	Qty	Denomination	size: Ø20	size: Ø25	size: Ø35
1	1	Lib seal (V), FPM	TE2601000229	TE2601000229	TE2601000363

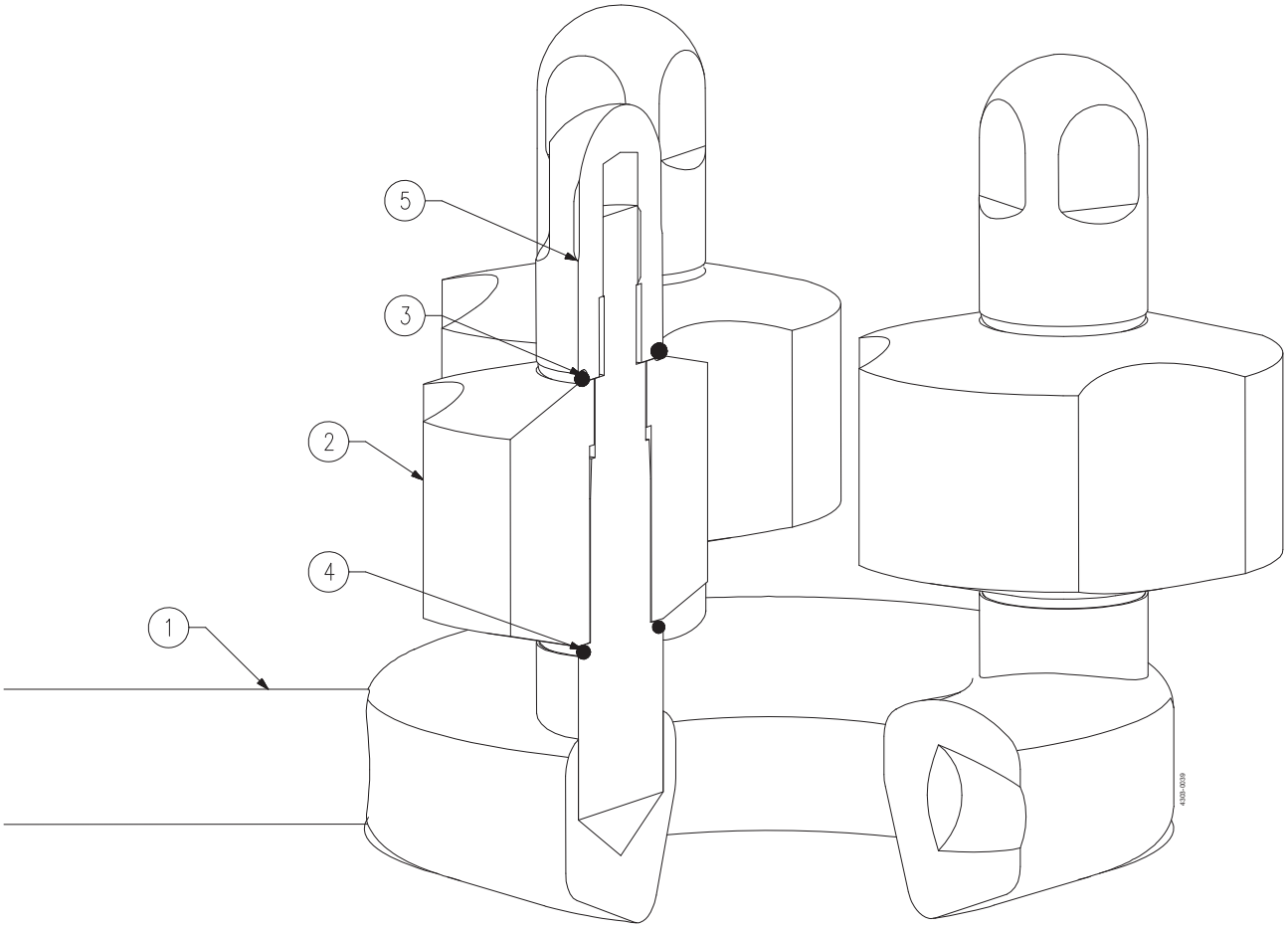
5
3
2
4
1

Pos		Qty	Denomination	size: Ø35/Ø40/Ø50	size: Ø55/Ø65/Ø75	size: Ø60/Ø70/Ø80
1		1	Intermediate steady support	TE26C5079690	TE26C5079730	TE26C5079730
2	□	3	Bushing, PTFE	TE260702681A	TE2607062110	TE260702868B
3	□	3	O-ring (Ø18,72x2,62), FPM	TE2601000639	TE2601000639	TE2601000639
4	□	3	O-ring (Ø18,72x2,62), FPM	TE2601000639		
	□	3	O-ring (Ø23,16x5,33), FPM		TE2601000677	TE2601000677
3	□	3	O-ring (Ø18,72x2,62), EPDM	TE2601000626	TE2601000626	TE2601000626
4	□	3	O-ring (Ø18,72x2,62), EPDM	TE2601000626		
	□	3	O-ring (Ø23,16x5,33), EPDM		TE2601000676	TE2601000676
5		3	Nut, special	TE26C7026860	TE26C7222720	TE26C7222720

		size: Ø35/Ø40/Ø50	size: Ø55/Ø65/Ø75	size: Ø60/Ø70/Ø80
Spare part kits				
□	Spare part kit, ISB, EPDM/FPM	TE2613079680	TE2613222920	TE2613222930

Bottom steady bearing support, type 1

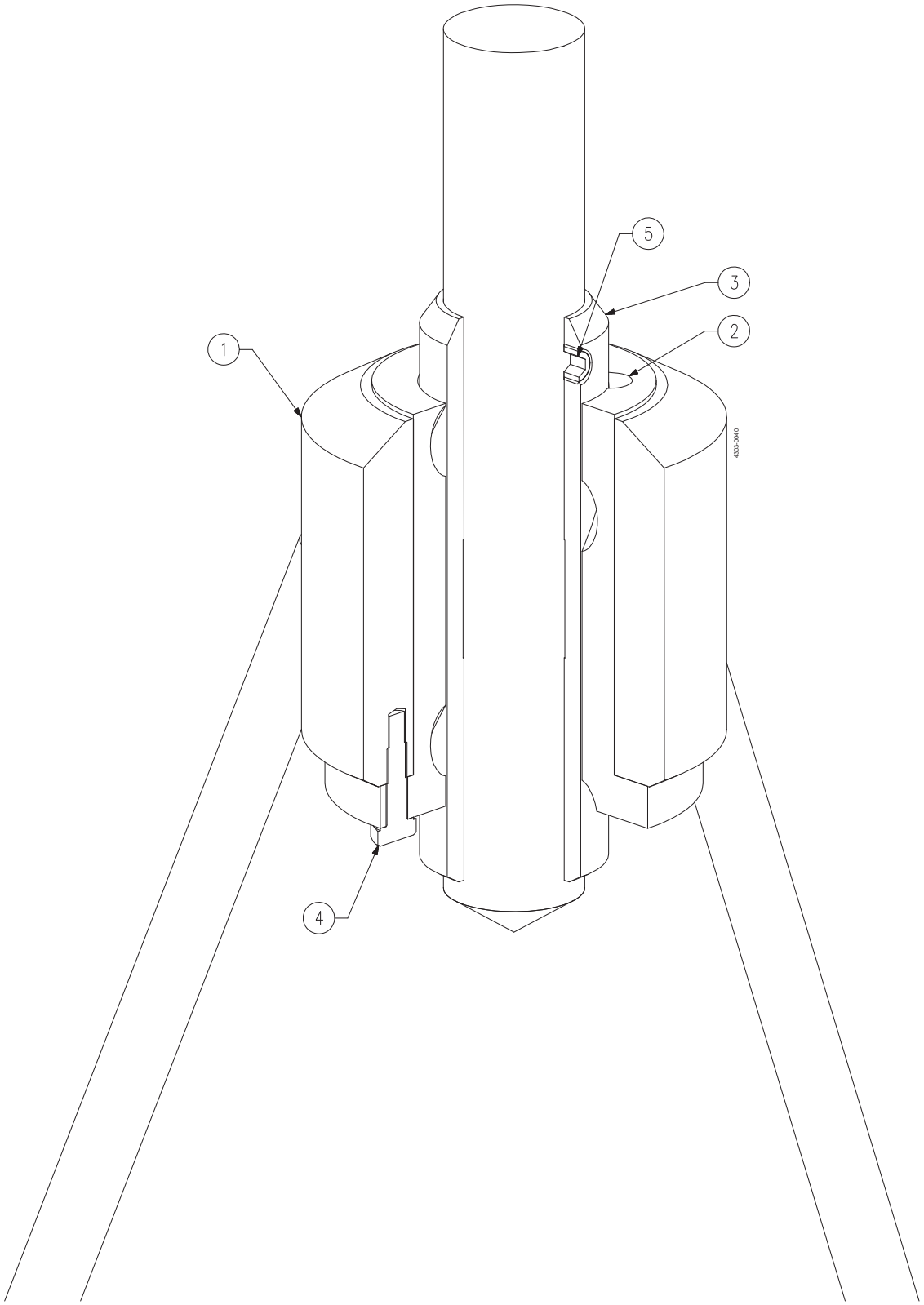

Bottom steady bearing support, type 1

Pos		Qty	Denomination	size: Ø25	size: Ø30	size: Ø35	size: Ø40
1		1	Bottom steady support, (without wear sleeve)	TE26C504149A	TE26C504149A	TE26C504149A	TE26C501852A
		1	Bottom steady support, (with wear sleeve)	TE26C504149A	TE26C501852A	TE26C501852A	TE26C5023060
2	□	1	Bushing, PTFE, (without wear sleeve)	TE2607041510	TE2607041450	TE2607041500	TE260702356B
	♦	1	Bushing, PTFE, (with wear sleeve)	TE2607041500	TE260702356B	TE260701849B	TE260702278B
3	♦	1	Wear sleeve	TE26C7034270	TE26C7034280	TE26C7034290	TE26C7034300
4		1	Screw, special	TE2607018550	TE2607018550	TE2607018550	TE2607018550
5		2	Screw, pointed	TE2601000358	TE2601000358	TE2601000358	TE2601000358

		size: Ø25	size: Ø30	size: Ø35	size: Ø40
Spare part kits					
□	Spare part kit, BS1	TE2613000133	TE2613000134	TE2613000135	TE2613000136
♦	Spare part kit, BS1 + wear sleeve	TE2613000165	TE2613000166	TE2613000167	TE2613000168

Pos		Qty	Denomination	size: Ø45	size: Ø50	size: Ø55	size: Ø60
1		1	Bottom steady support, (without wear sleeve)	TE26C501852A	TE26C5023060	TE26C5023060	TE26C5023050
		1	Bottom steady support, (with wear sleeve)	TE26C5023060	TE26C5023050	TE26C5023050	TE26C5023050
2	□	1	Bushing, PTFE (without wear sleeve)	TE260701849B	TE260702278B	TE260702240B	TE2607063040
	♦	1	Bushing, PTFE (with wear sleeve)	TE260702240B	TE2607063040	TE2607063050	TE2607063060
3	♦	1	Wear sleeve	TE26C703894B	TE26C7034310	TE26C7034320	TE26C7034330
4		1	Screw, special	TE2607018550	TE2607018550	TE2607018550	
		3	Screw, special				TE2607018550
5		2	Screw, pointed	TE2601000358	TE2601000358	TE2601000358	TE2601000358

		size: Ø45	size: Ø50	size: Ø55	size: Ø60
Spare part kits					
□	Spare part kit, BS1	TE2613000029	TE2613000030	TE2613000178	TE2613000179
♦	Spare part kit, BS1 + wear sleeve	TE2613000169	TE2613000170	TE2613000171	TE2613000172

Pos		Qty	Denomination	size: Ø65	size: Ø70	size: Ø75	size: Ø80
1		1	Bottom steady support, (without wear sleeve)	TE26C5023050	TE26C5023050	TE26C5023050	TE26C5079410
		1	Bottom steady support, (with wear sleeve)	TE26C5023050	TE26C5079410	TE26C5079410	TE26C5079410
2	□	1	Bushing, PTFE, (without wear sleeve)	TE2607063050	TE2607063060	TE2607063070	TE2607079420
	♦	1	Bushing, PTFE, (with wear sleeve)	TE2607063070	TE2607079420	TE2607079430	TE2607079440
3	♦	1	Wear sleeve	TE26C7034340	TE26C7034350	TE26C7034360	TE26C7034370
4		3	Screw, special	TE2607018550	TE2607018550	TE2607018550	TE2607018550
5		2	Screw, pointed	TE2601000358	TE2601000358	TE2601000358	TE2601000358

		size: Ø65	size: Ø70	size: Ø75	size: Ø80
Spare part kits					
□	Spare part kit, BS1	TE2613000180	TE2613000186	TE2613000187	TE2613000188
♦	Spare part kit, BS1 + wear sleeve	TE2613000173	TE2613000174	TE2613000175	TE2613000177

Pos		Qty	Denomination	size: Ø90
1		1	Bottom steady support, (without wear sleeve)	TE26C5079410
2	□	1	Bushing, PTFE, (without wear sleeve)	TE2607079440
4		3	Screw, special	TE2607018550

		size: Ø90
Spare part kits		
□	Spare part kit, BS1	TE2613000189

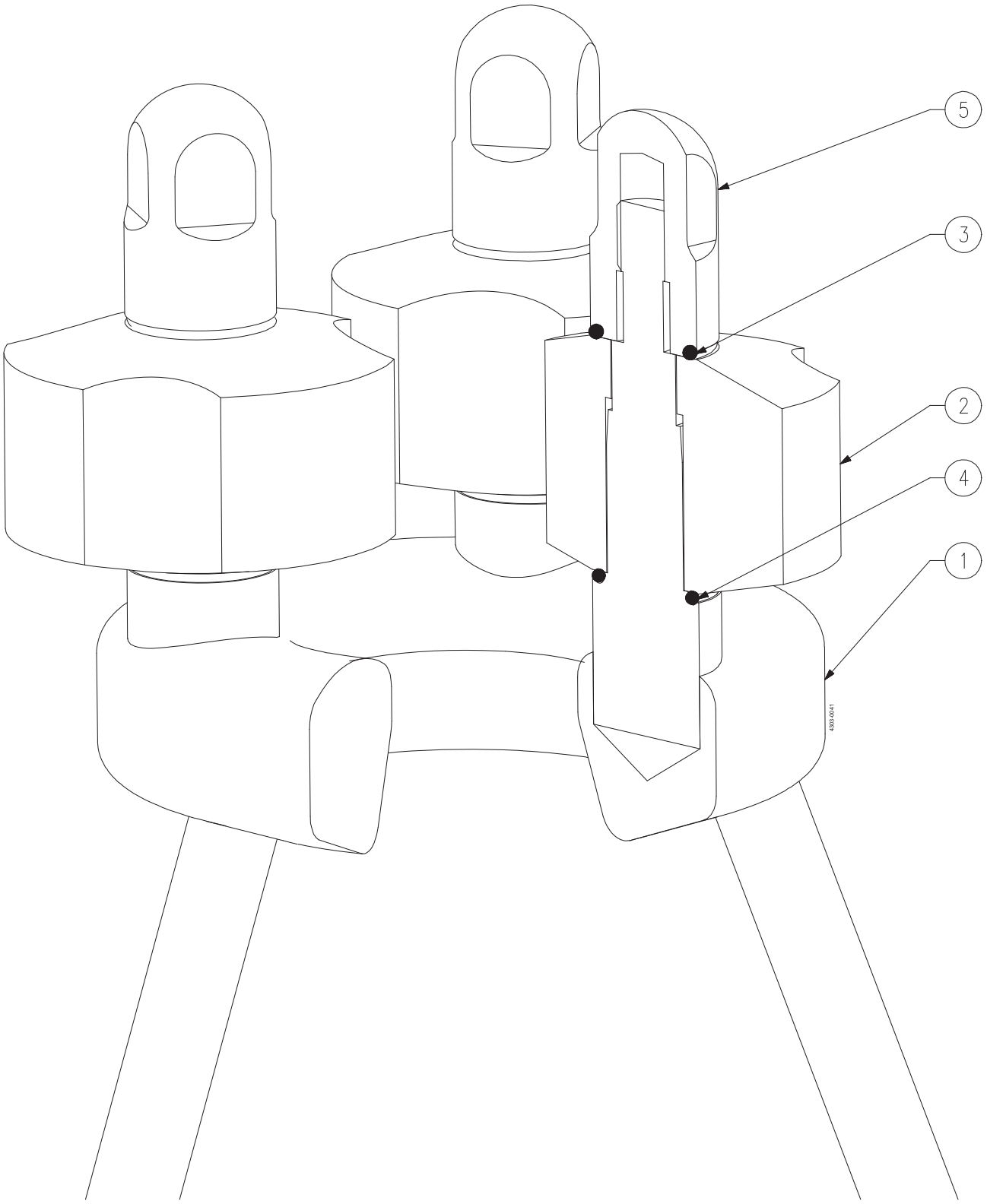
5
3
2
4
1
4303-0041

Bottom steady bearing support, type 2

Pos		Qty	Denomination	size: Ø35/Ø40/Ø50	size: Ø55/Ø65/Ø75	size: Ø60/Ø70/Ø80
1		1	Bottom steady support	TE26C5033220	TE26C5029100	TE26C5029100
2	□♦	3	Bushing, PTFE	TE260702681A	TE2607222730	TE2607222850
3	□	3	O-ring, Ø18,72x2,62 FPM	TE2601000639	TE2601000639	TE2601000639
4	□	3	O-ring, Ø18,72x2,62 FPM	TE2601000639		
	□	3	O-ring, Ø23,16x5,33 FPM		TE2601000677	TE2601000677
3	♦	3	O-ring, Ø18,72x2,62 EPDM	TE2601000626	TE2601000626	TE2601000626
4	♦	3	O-ring, Ø18,72x2,62 EPDM	TE2601000626		
	♦	3	O-ring, Ø23,16x5,33 EPDM		TE2601000676	TE2601000676
5		3	Nut, special	TE26C7026860	TE26C7222720	TE26C7222720

	size: Ø35/Ø40/Ø50	size: Ø55/Ø65/Ø75	size: Ø60/Ø70/Ø80
Spare part kits			
□ Spare part kit, BS2, FPM	TE2613209210	TE2613222900	TE2613222910
♦ Spare part kit, BS2, EPDM	TE2613026830	TE2613222740	TE2613222840

How to contact Alfa Laval
Contact details for all countries are
continually updated on our website.
Please visit www.alfalaval.com to access the information directly.

© Alfa Laval Corporate AB
This document and its contents is owned by Alfa Laval Corporate AB and protected by laws governing intellectual property and thereto related rights. It is the responsibility of the user of this document to comply with all applicable intellectual property laws. Without limiting any rights related to this document, no part of this document may be copied, reproduced or transmitted in any form or by any means (electronic, mechanical, photocopying, recording, or otherwise), or for any purpose, without the expressed permission of Alfa Laval Corporate AB. Alfa Laval Corporate AB will enforce its rights related to this document to the fullest extent of the law, including the seeking of criminal prosecution.