Instruction Manual

Unique Single Seat Valve Aseptic - Manually Operated

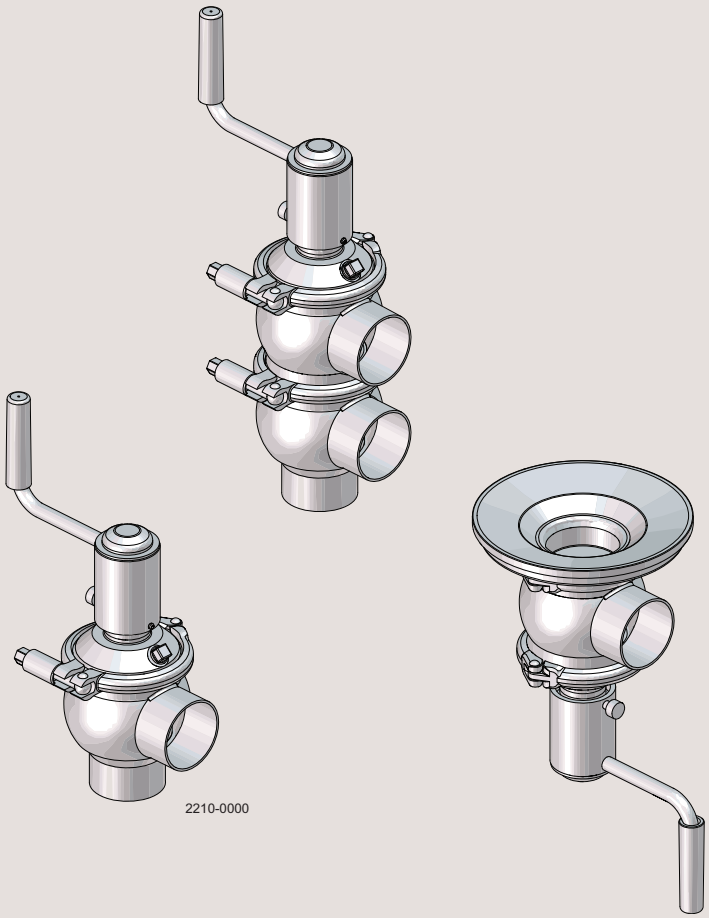

ESE02414-EN2 2016-03

Original manual

Authorized to carry the 3A symbol

Table of contents

The information herein is correct at the time of issue but may be subject to change without prior notice

1. CE Declaration of Conformity **4**

2. Safety **5**
2.1. Important information 5
2.2. Warning signs 5
2.3. Safety precautions 6

3. Installation **7**
3.1. Unpacking/delivery 7
3.2. General installation 9
3.3. Welding 11

4. Operation **13**
4.1. Operation 13
4.2. Troubleshooting 14
4.3. Recommended cleaning 15

5. Maintenance **17**
5.1. General maintenance 17
5.2. Dismantling of valve 19
5.3. Plug seal replacement 20
5.4. Valve assembly 21
5.5. Manual actuator bushing and lip seal replacement 22

6. Technical data **23**
6.1. Technical data 23

7. Parts list and service kits **24**
7.1. Aseptic regulating - sectional drawing 24
7.2. Aseptic regulating 26
7.3. Aseptic manually operated - shut-off - sectional drawing 28
7.4. Aseptic manually operated - shut-off 30
7.5. Aseptic manually operated - change-over - sectional drawing 32
7.6. Aseptic manually operated - change-over 34
7.7. Aseptic manual tank outlet - sectional drawing 36
7.8. Aseptic manual tank outlet 38
7.9. Accessories tool 40

1 CE Declaration of Conformity

The designated company

Alfa Laval
Company Name

Albuen 31, DK-6000 Kolding, Denmark
Address

+45 79 32 22 00
Phone No.

hereby declare that

Unique Single Seat Valve , Aeeptic - Manually Operated	Valve	25-03-2013
Designation	Type	Year

is in conformity with the following directives:
- Machinery Directive 2006/42/EC
- Pressure Equipment Directive 97/23/EC category 1 and subjected to assessment procedure Module A

Global Product Quality Manager Pumps, Valves, Fittings and Tank Equipment	Lars Kruse Andersen
Title	Name
Kolding	
Place	Signature

Designation

Unsafe practices and other important information are emphasised in this manual.
Warnings are emphasised by means of special signs.

2.1 Important information

Always read the manual before using the valve!

WARNING
Indicates that special procedures must be followed to avoid serious personal injury.

CAUTION
Indicates that special procedures must be followed to avoid damage to the valve.

NOTE
Indicates important information to simplify or clarify procedures.

2.2 Warning signs

General warning:

Caustic agents:

2 Safety

All warnings in this manual are summarised on this page.
Pay special attention to the instructions below so that serious personal injury and/or damage to the valve are avoided.

2.3 Safety precautions

Installation:

Always read the technical data thoroughly (see chapter 6 Technical data)
Never touch the valve or the pipelines when processing hot liquids or when sterilising
Never dismantle the valve with the valve and pipelines under pressure
Never dismantle the valve when it is hot

Operation:

Never dismantle the valve with the valve and pipelines under pressure
Never dismantle the valve when it is hot
Always read the technical data thoroughly (see chapter 6 Technical data)
Always rinse well with clean water after cleaning

Always handle lye and acid with great care

Maintenance:

Always read the technical data thoroughly (see chapter 6 Technical data)
Never service the valve when it is hot
Never service the valve with the valve and pipelines under pressure

Transportation:

Always ensure that compressed air is released
Always ensure that all connections are disconnected before attempting to remove the valve from the installation
Always drain liquid out of valves before transportation
Always used predesigned lifting points, if available
Always ensure sufficient fixing of the valve during transportation - if specially designed packaging material is available, it must be used

3 Installation

The instruction manual is part of the delivery. Study the instructions carefully.
The items refer to the parts list and service kits section.
The valve is supplied as separate parts as standard (for welding).
The valve is assembled before delivery, if it is supplied with fittings.

3.1 Unpacking/delivery

Step 1
CAUTION
Alfa Laval cannot be held responsible for incorrect unpacking.

Check the delivery for:
1. Complete valve, shut-off valve or change-over valve.
2. Delivery note.

3 Installation

The instruction manual is part of the delivery. Study the instructions carefully.
The items refer to the parts list and service kits section.
The valve is supplied as separate parts as standard (for welding).
The valve is assembled before delivery, if it is supplied with fittings.

Step 2

2a
Shut-off valve:
1. Complete handle.
2. Clamp (19).
3. Valve plug (23).
4. Valve body (22).
5. Diaphragm (29)
6. Disc (30)

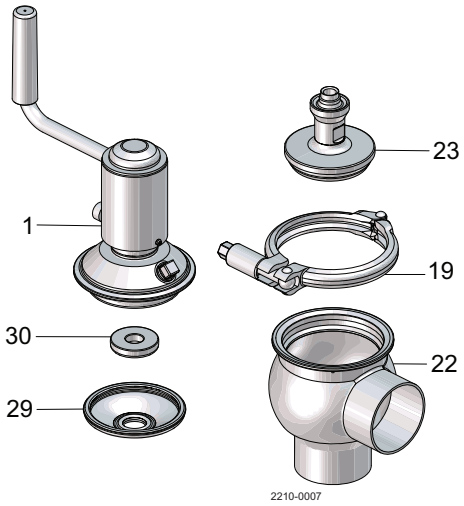

2b
Change-over valve:
1. Complete actuator.
2. 2 x clamps (19).
3. Valve plug (27).
4. Lower valve body (22).
5. Valve seat (28).
6. Upper valve body (26).
7. Diaphragm (29)
8. Disc (30)

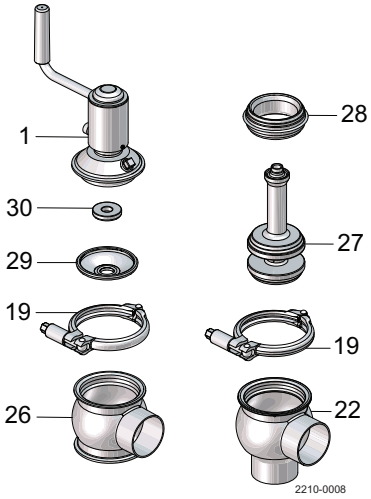

2C
Tank outlet valve:
1. Complete actuator.
2. 2 x clamps (19).
3. Valve plug (23).
4. Tank flange (40).
5. Valve seat (28).
6. Valve body (26).
7. Diaphragm (29)
8. Disc (30)

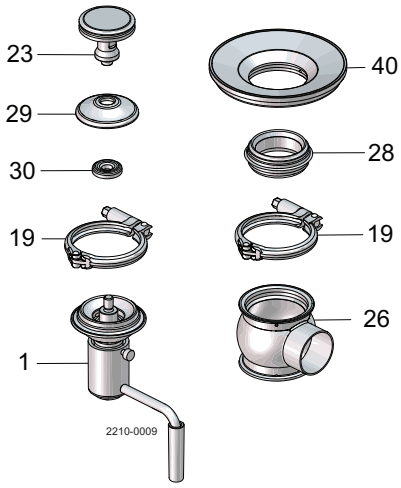

Step 3
Remove any packing materials from the valve/valve parts.
Inspect the valve/valve parts for visible transport damage.
Avoid damaging the valve/valve parts.

The instruction manual is part of the delivery. Study the instructions carefully.
The items refer to the parts list and service kits section.
The valve is supplied as separate parts as standard (for welding).
The valve is assembled before delivery, if it is supplied with fittings.

3.2 General installation

Step 1

⚠

Always read the technical data thoroughly.
See chapter 6 Technical data.

CAUTION
Alfa Laval cannot be held responsible for incorrect installation.

Step 2

⚠

Never put your fingers into the valve body during operation.

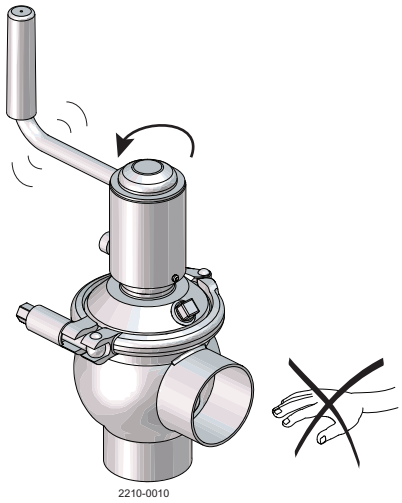

Moving parts!

Step 3
The manually operated valve (1) can be installed with closing flow in both directions, without “water hammering” problems.

The manual regulating valve (2) must be installed with inlet flow as shown.

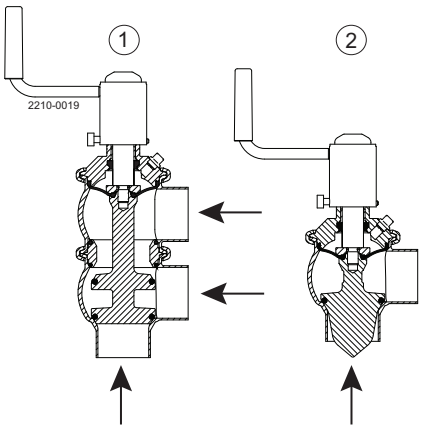

3 Installation

The instruction manual is part of the delivery. Study the instructions carefully.
The items refer to the parts list and service kits section.
The valve is supplied as separate parts as standard (for welding).
The valve is assembled before delivery, if it is supplied with fittings.

Step 4
Avoid stresses to the valve.
Pay special attention to:
- Vibrations.
- Thermal expansion of the pipelines.
- Excessive welding.
- Overloading of the pipelines.

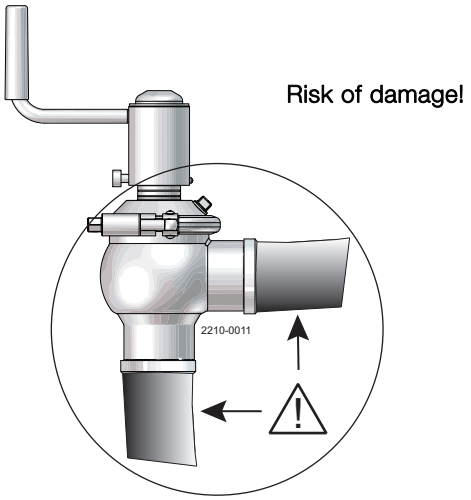

Step 5

Always check if the diaphragm is tight - it can be dangerous if it leaks steam/CIP.
For safety purposes, a 6 mm hose and fitting can be mounted as shown. The hose should reach the drain.

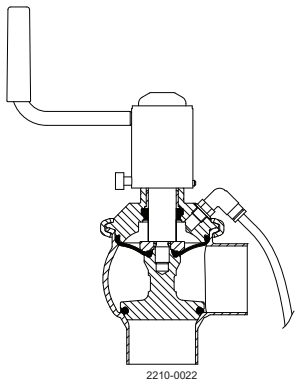

Study the instructions carefully.
The valve is supplied as separate parts as standard (for welding).
The items refer to the parts list and service kits section.
Check the valve for smooth operation after welding.

3.3 Welding

Step 1

1a:

Always install valves with more than one valve body so that the seals between the valve bodies can be replaced. Do not weld more than one valve body into the system.
Measurement A is determined by body combination and piping solution.
Please see actual PD sheet for further information.

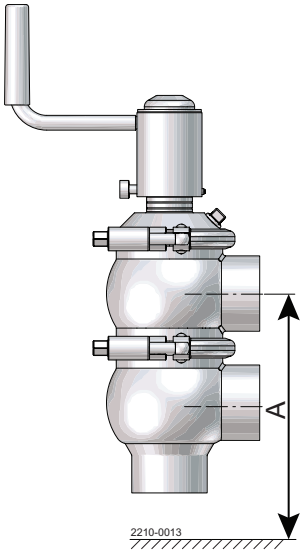

1b: (only for manual tank outlet valve)

Before welding the flange into the tank, please note:
1. Maintain the minimum clearances “A” to ensure that the actuator and the internal valve parts can be removed - please see information later in this section.

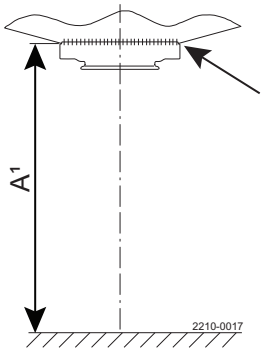

Min. dimensions

Size	DN/OD				DN			
	51	63.5	76.1	101.6	50	65	80	100
A^1	340	380	390	440	340	385	400	440

A^1 = Min. installation measure to allow the valve to be lifted out of the tank flange/valve body.

2. Only use pulsed arc welding and remember there must be no gap between flange and tank plate.
   Always tack weld on the opposite side (8 segments with filler metal). Weld root if possible without filler metal.
   Welding of the final run must be carried out in 8 segments to avoid cracking.

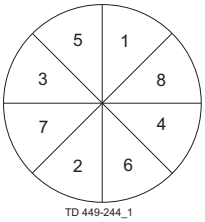

3 Installation

Study the instructions carefully.
The valve is supplied as separate parts as standard (for welding).
The items refer to the parts list and service kits section.
Check the valve for smooth operation after welding.

Step 2
Assemble the valve in accordance with the steps in section 5.4 Valve assembly.
Pay special attention to the warnings!

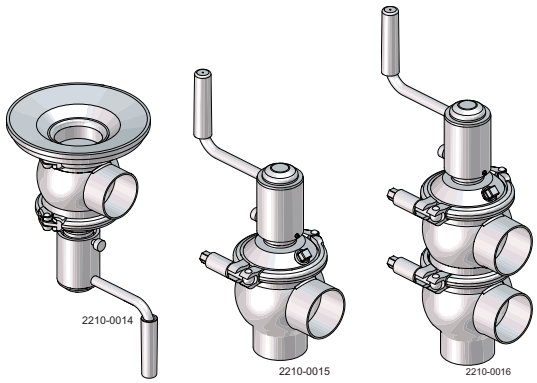

Study the instructions carefully and pay special attention to the warnings!
Ensure that the valve operates smoothly.
The items refer to the parts list and service kits section.

4.1 Operation

Step 1

Always read the technical data thoroughly.
See chapter 6 Technical data.

CAUTION
Alfa Laval cannot be held responsible for incorrect operation.

Step 2

Never touch the valve or the pipelines when processing hot liquids or when sterilising.

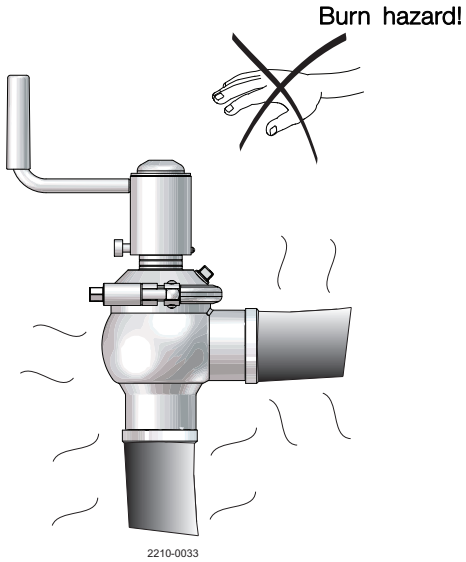

Step 3
CAUTION:
We recommend that the diaphragm is not re-used (position 29) after dismantling (risk of damage and leakage).

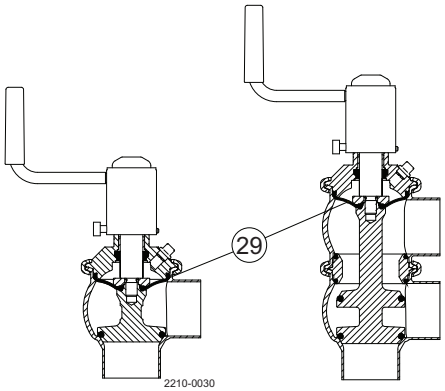

Step 4
Actuator lubrication
1. Lubricate the "brass stem extension" (pos 16) with Molykote Longterm 2 Plus, if necessary
2. Ensure smooth movement of the crank mechanism. Lubricate the actuator thread with Molycote TP42 if necessary (the crank is lubricated before delivery).

4 Operation

Pay attention to possible faults. Study the instructions carefully.
The items refer to the parts list and service kits section.

4.2 Troubleshooting

NOTE!

Study the maintenance instructions carefully before replacing worn parts - see section 5.3 Plug seal replacement!

Problem	Cause/result	Remedy
External product leakage	Worn or damaged diaphragm and/or o-ring	- Replace the diaphragm - Replace with seals of a different rubber grade
Internal product leakage	- Worn or damaged plug seal	- Replace the seal - Replace with a seal of a different rubber grade
	- Product deposits on the seat and/or plug	- Regular cleaning
The valve does not open/close	Product pressure exceeds actuator specification	Reduce product pressure Lubricate the actuator thread with Molykote-TP42 if necessary.

The valve is designed for cleaning in place (CIP).
Study the instructions carefully and pay special attention to the warnings!
NaOH = Caustic soda.
HNO_3 = Nitric acid.

4.3 Recommended cleaning

Step 1

Always handle lye and acid with great care.

Caustic danger!

Always use rubber gloves!

Always use protective goggles!

Step 2

Never touch the valve or the pipelines when sterilising.

Burn hazard!

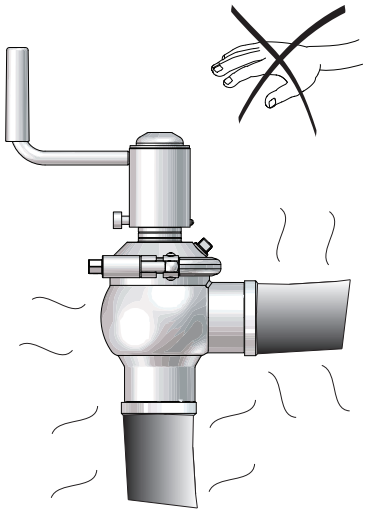

2210-0033

Step 3

Clean the plug and the seats correctly.
Pay special attention to the warnings!

Activate valve plug several times

Shut-off valve

Change-over valve

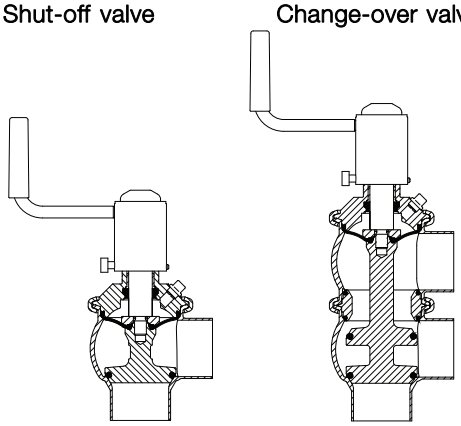

2210-0029

4 Operation

The valve is designed for cleaning in place (CIP).
Study the instructions carefully and pay special attention to the warnings!
NaOH = Caustic soda.
HNO_3 = Nitric acid.

Step 4
Examples of cleaning agents:
Use clean water, free from chlorides.

1. 1% by weight NaOH at 70° C

1 kg NaOH	+	100 l water	=	Cleaning agent.
2.2 l 33% NaOH	+	100 l water	=	Cleaning agent.

2. 0.5% by weight HNO_3 at 70° C

0.7 l 53% HNO_3	+	100 l water	=	Cleaning agent.

Step 5
1. Avoid excessive concentration of the cleaning agent.
2. Adjust the cleaning flow to the process.
3. **Always** rinse well with clean water after the cleaning.

Always rinse!

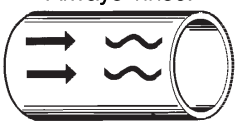

Clean water Cleaning agents

Step 6
NOTE
The cleaning agents must be stored/disposed of in accordance with current regulations/directives.

Maintain the valve regularly.
Study the instructions carefully and pay special attention to the warnings!
Always keep spare rubber seals and lip seals in stock.

5.1 General maintenance

Step 1

⚠

Always read the technical data thoroughly.
See chapter 6 Technical data.

NOTE
All scrap must be stored/disposed of accordance with current regulations/directives.

Step 2

⚠

Never service the valve when it is hot.

⚠

Never service the valve with the valve and pipelines under pressure.

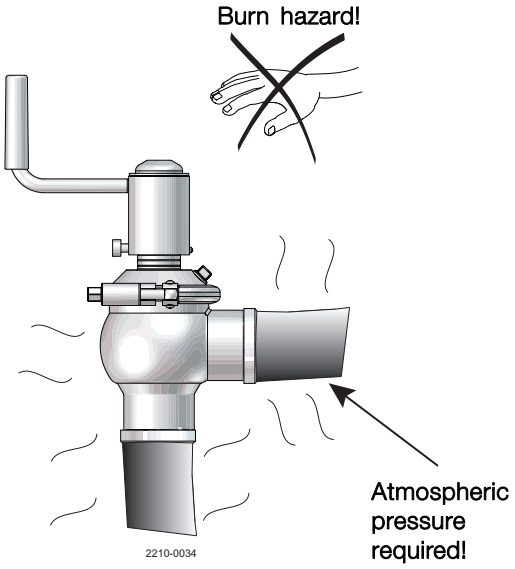

Step 3

⚠

Never stick your fingers through the valve ports.

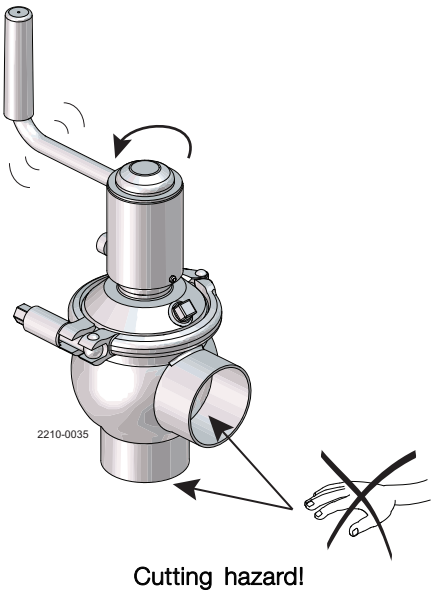

5 Maintenance

Maintain the valve regularly.
Study the instructions carefully and pay special attention to the warnings!
Always keep spare rubber seals and lip seals in stock.

Step 4
Below are some guidelines for maintenance and lubrication intervals. Please note that the guidelines are for normal working conditions in one shift.

	Product wetted seals
Preventive maintenance	Replace after 12 months depending on working conditions
Maintenance after leakage (leakage normally starts slowly)	Replace at the end of the day
Planned maintenance	- Regular inspection for leakage and smooth operation - Keep a record of the valve - Use the statistics for inspection planning Replace after leakage
Lubrication	Before fitting Klüber Paraliq GTE 703 or similar USDA H1 approved oil/grease

Lubrication of the actuator thread must be done with Molykote TP-42 - see also 4.1 Operation, Step 4

Pre-use check:
Open and close the valve several times to ensure that it operates smoothly.
Pay special attention to the warnings!

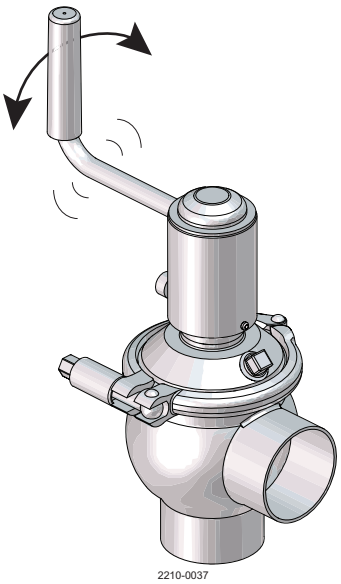

Recommended spare parts
Service kits (see chapter 7 Parts list and service kits)

Maintain the valve regularly.
Study the instructions carefully and pay special attention to the warnings!
Always keep spare rubber seals and lip seals in stock.

5.2 Dismantling of valve

Step 1a - Shut-off and tank outlet valve

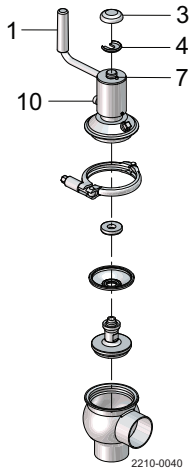

Always ensure that the valve is depressurised.

1. Place the crank in the middle position and remove the clamp.
2. Rotate the crank downwards so the plug presses the sealing element upwards from the valve body.
3. Remove the cap (3) and loosen the screws (7+10) and remove the washer (4) by sliding it sideways
   Now remove the crank from the sealing element.
4. Unscrew the valve plug from the actuator spindle.
   This is done by inserting a screwdriver into the spindle and using a 17mm spanner at the valve plug.
5. Remove the diaphragm and disc.

The lip-seal and bushing in the sealing element can be replaced if necessary (see section 5.5 Manual actuator bushing and lip seal replacement)

Step 2b - Change-over valve

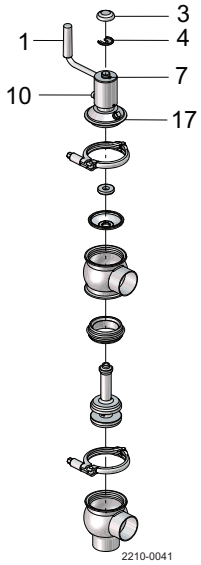

Always ensure that the valve is depressurised.

1. Place the crank in the top position (so the valve plug is upwards) and remove the upper and lower clamp.
2. Lift away the upper valve body with the actuator.
3. Remove the cap (3) and loosen the screws (7+10) and remove the washer (4) by sliding it sideways.
   Now remove the crank (1) from the sealing element (17).
4. Unscrew the valve plug from the actuator spindle.
   This is done by inserting a screwdriver into the spindle and using a 17mm spanner at the valve plug.
5. Remove the upper valve body and the valve seat (28).
6. Remove the diaphragm and disc. The sealing element can be difficult to remove from the valve body, but if this is the case then use the valve plug (without the valve seat (28)) to press it out of the valve body.

The lip seal and bushing in the sealing element can be replaced if necessary (see section 5.5 Manual actuator bushing and lip seal replacement)

5 Maintenance

Maintain the valve regularly.
Study the instructions carefully and pay special attention to the warnings!
Always keep spare rubber seals and lip seals in stock.

5.3 Plug seal replacement

Step 1

1. Remove the old seal ring using a knife, screwdriver or similar. Be careful not to damage metal parts.
2. Pre-mount the plug seal without pressing it into the groove.
3. Squeeze the plug seal into the groove using opposite pressure points.
4. Release compressed air behind plug seal.

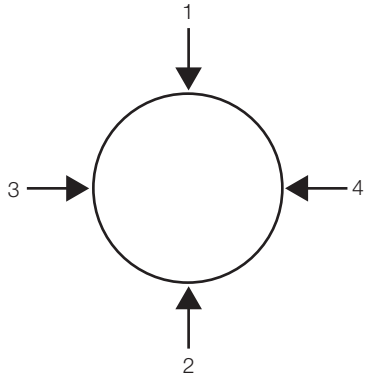

Note! For plug seal replacement, please see section 7.9 Accessories tool

Maintain the valve regularly.
Study the instructions carefully and pay special attention to the warnings!
Always keep spare rubber seals and lip seals in stock.

5.4 Valve assembly

Step 1a - Shut-off and tank outlet valve

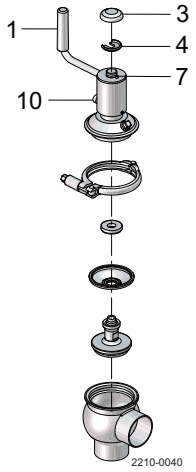

1. Fit the diaphragm, disc and spindle to the sealing element. Remember to turn the disc correctly (see drawing below).
   Grease with “Paralique GT703” outside of the diaphragm and on the valve body
2. Tighten the valve plug and actuator spindle (14).
   Use torque 33 Nm (ISO51/DN50-ISO101/DN100) and 15Nm (ISO25/DN25-ISO38/DN38). This is done by inserting a screwdriver into the spindle and using a 17mm spanner at the valve plug. We recommend the use of Loctite 243.
   The clamps thread must be lubricated before tightening - max. torque for the clamps is 10-12 Nm.
3. Screw the crank (1) onto the sealing element. Fit the cap (3) and the screws (7+10) and the washer (4) by sliding it sideways
4. Place the crank in the middle position so that it is easier to mount the actuator onto the valve body
5. Now press hard on the actuator crank and fit it into the valve body. Ensure that the diaphragm still is correctly mounted on the sealing element (see drawing below)
6. Mount the clamp
7. Move the crank up and down to ensure proper function

Step 2a - Change-over valve

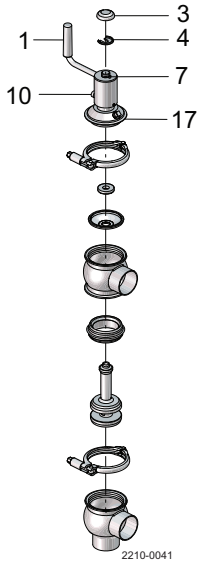

1. Fit the diaphragm, disc and spindle to the sealing element. Remember to turn the disc correctly (see drawing below).
   Grease with “Paralique GT703” outside on the diaphragm and on the valve body.
2. Press the sealing element with diaphragm, disc and spindle into the upper valve body. Ensure that the diaphragm still is correctly mounted on the sealing element (see drawing below).
3. Fit the valve seat (28) onto the plug.
4. Tighten the valve plug and actuator spindle (14).
   Use torque 33 Nm (ISO51/DN50-ISO101/DN100) and 15 Nm (ISO25/DN25-ISO38/DN38). This is done by inserting a screwdriver into the spindle and using a 17mm spanner at the valve plug. We recommend the use of Loctite 243.
   The clamps thread must be lubricated before tightening - max. torque for the clamps is 10-12 Nm.
5. Screw the crank (1) onto the sealing element and place it in the middle position. Be careful as the diaphragm is pulled out if the crank (1) is placed in closed position. Fit the cap (3) and the screws (7+10) and the washer (4) by sliding it sideways.
6. Fit the upper clamp, but remember NOT to screw the valve plug downwards as the diaphragm will then be overstretched and destroyed.
7. Fit the “complete upper valve body with the actuator” into the lower valve body (26).
8. Fit the lower clamp.
9. Move the crank up and down to ensure proper function.

Make sure that the diaphragm is securely mounted on the sealing element (17), before installing the complete diaphragm, disc and spindle into the valve body.
Remember to turn the disc (30) correctly.

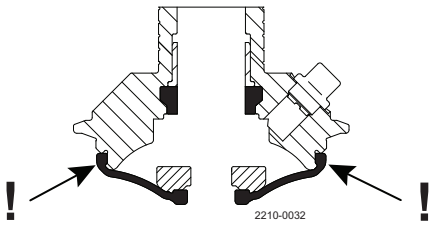

5 Maintenance

Maintain the valve regularly.
Study the instructions carefully and pay special attention to the warnings!
Always keep spare rubber seals and lip seals in stock.

5.5 Manual actuator bushing and lip seal replacement

Step 1
In the sealing element (pos. 17) is a bushing (pos. 12) and a lip seal (pos. 11), which can be replaced.
Alfa Laval recommends using the bushing tool (see section 7.9 Accessories tool)

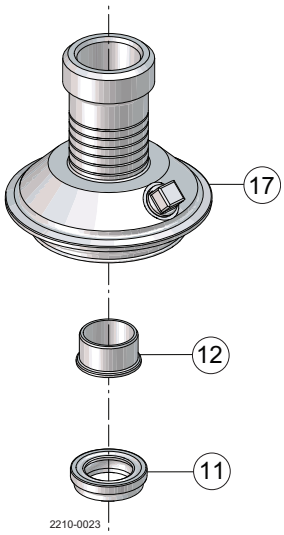

It is important to observe the technical data during installation, operation and maintenance.
Inform all personnel about the technical data.

6.1 Technical data

Data - valve/actuator	
Max. product pressure in tank	1000 kPa (10 bar / 20°C) 850 kPa (8.5 bar/ 100°C) 750 kPa (7.5 bar / 150°C)
Min. product pressure in tank	Full vacuum
Max. product pressure in pipeline	800 kPa (8 bar/140° C).
Min. product pressure in pipeline	Full vacuum.
Max. sterilisation temperature (steam - short time)	150° C to -380 kPa (3.8 bar)
Temperature range	-10° C to + 140° C (standard EPDM seal).
Note: Vacuum in the pipeline should be avoided due to the diaphragm service life.	
Materials - valve/actuator	
Product wetted steel parts	1.4404 (316L) (internal Ra < 0.8 µm).
Other steel parts	1.4301 (304).
Plug seal	EPDM.
Diaphragm	EPDM/PTFE.
Other product wetted seals	EPDM (standard).
Optional product wetted seals	HNBR and FPM.

7 Parts list and service kits

It is important to observe the technical data during installation, operation and maintenance.
Inform all personnel about the technical data.

7.1 Aseptic regulating - sectional drawing

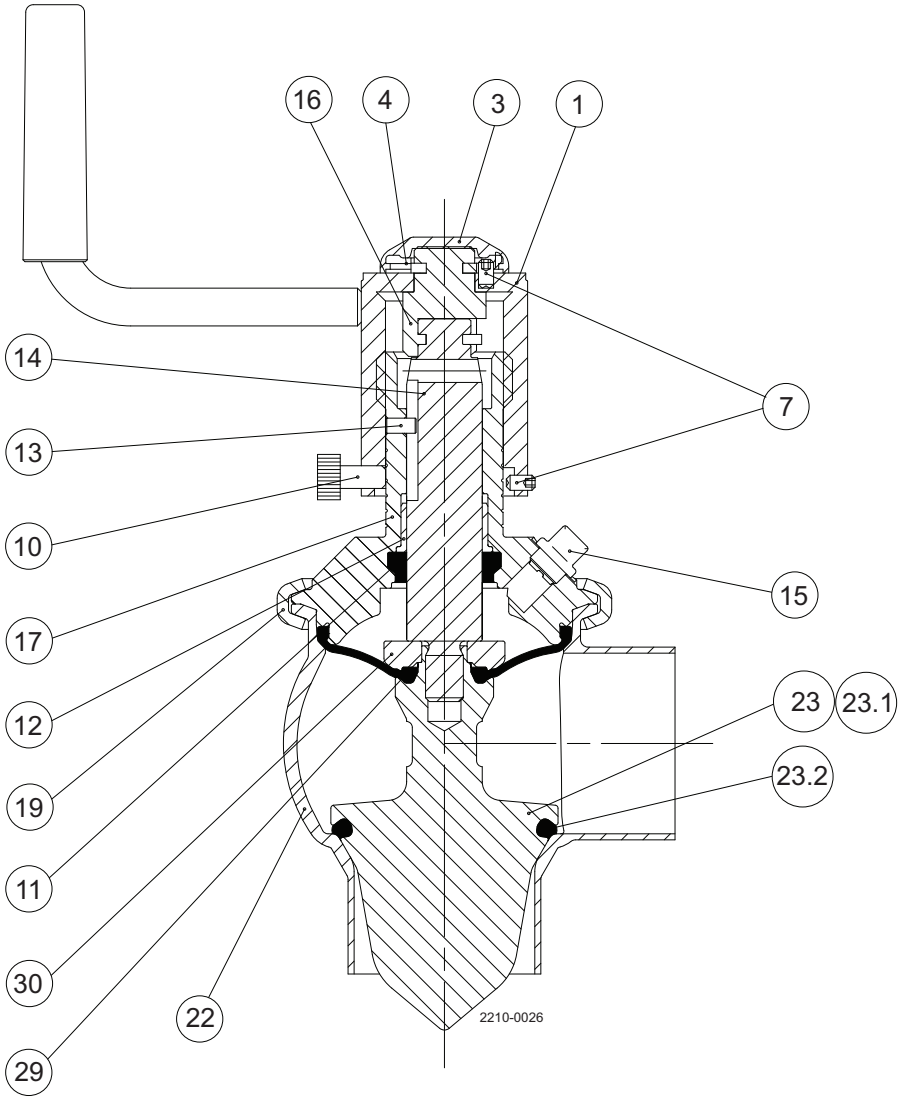

7 Parts list and service kits

It is important to observe the technical data during installation, operation and maintenance.
Inform all personnel about the technical data.

7.2 Aseptic regulating

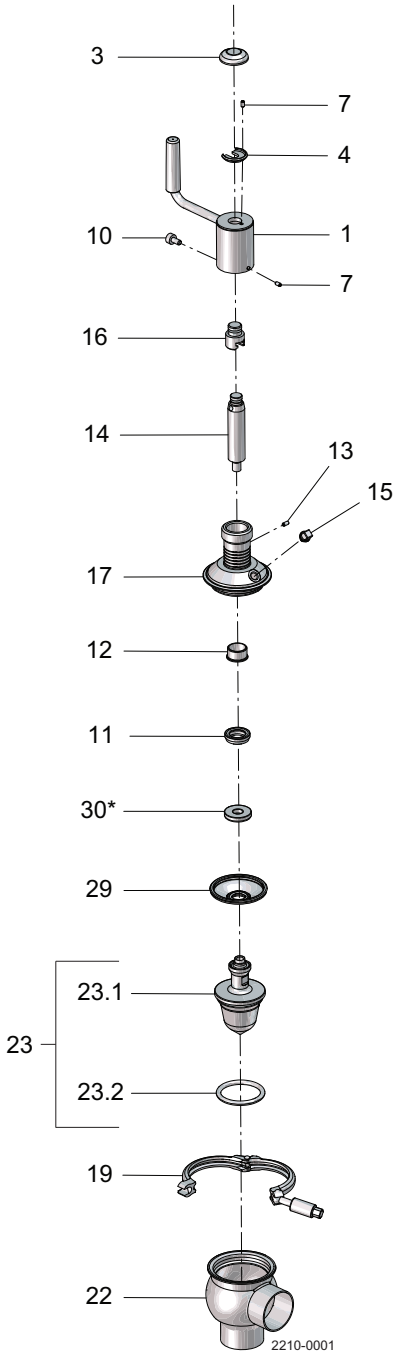

* = Disc not used on DN40/38 mm

It is important to observe the technical data during installation, operation and maintenance.
Inform all personnel about the technical data.

Parts list

Pos.	Qty	Denomination
		Crank mechanism complete
1	1	Crank
3	1	Cap
4	1	Washer
7	2	Set screw
10	1	Lock screw
11	1	Lip seal
12	1	Bushing
13	1	Spring pin
14	1	Upper spindle
15	1	Plug
16	1	Stem extension
17	1	Sealing element
19	1	Clamp
22	1	Valve body
23	1	Plug, complete
23.1	1	Plug
23.2 ♦	1	Plug seal
29 ♦	1	Diaphragm
30	1	Disc for diaphragm

Service kits

	Denomination	DN40 38 mm	DN50 51 mm	DN65 63.5 mm	DN80 76.1 mm	DN100 101.6 mm
♦	Service kit, EPDM	9611926544	9611926545	9611926546	9611926547	9611926548
♦	Service kit, HNBR	9611926550	9611926551	9611926552	9611926553	9611926554
♦	Service kit, FPM	9611926556	9611926557	9611926558	9611926559	9611926560

Parts marked with ♦ are included in the service kits (product wetted parts)
Tool for bushing (pos. 12) 9613160901

TD900-656

It is important to observe the technical data during installation, operation and maintenance.
Inform all personnel about the technical data.

7.3 Aseptic manually operated - shut-off - sectional drawing

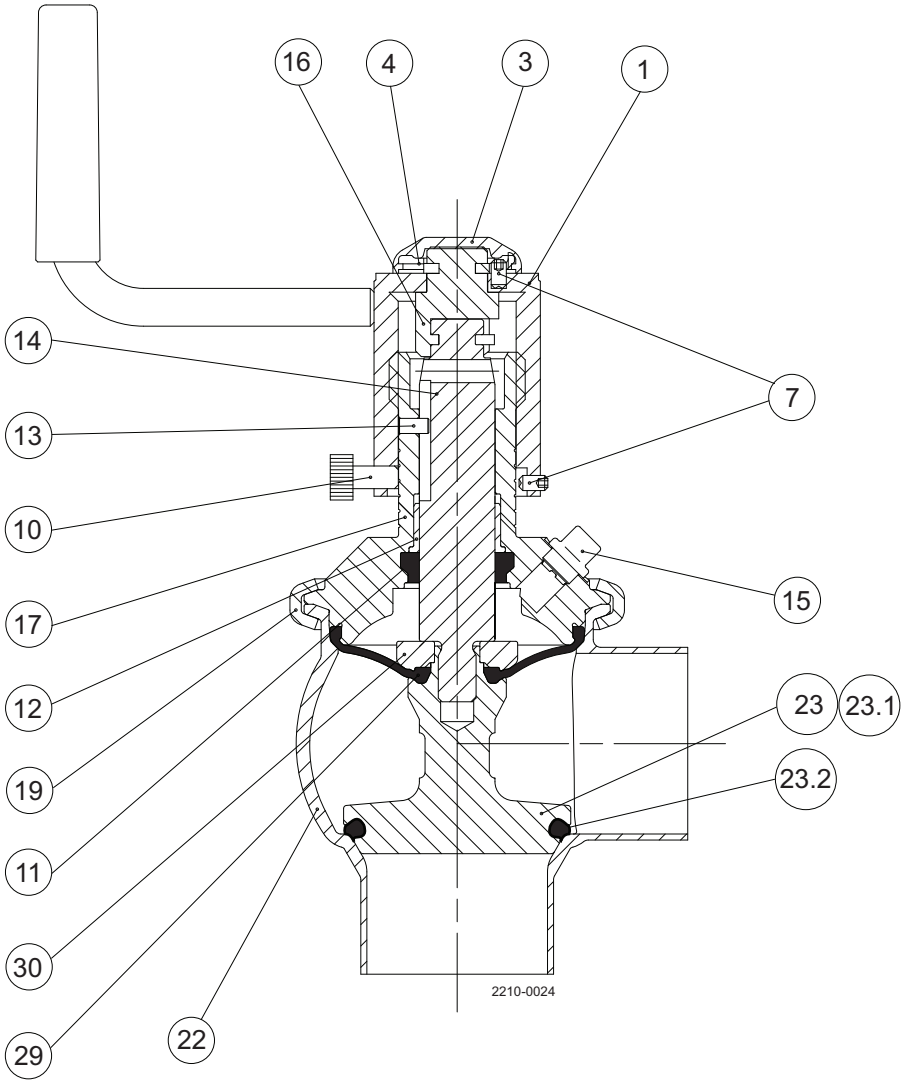

It is important to observe the technical data during installation, operation and maintenance.
Inform all personnel about the technical data.

7.4 Aseptic manually operated - shut-off

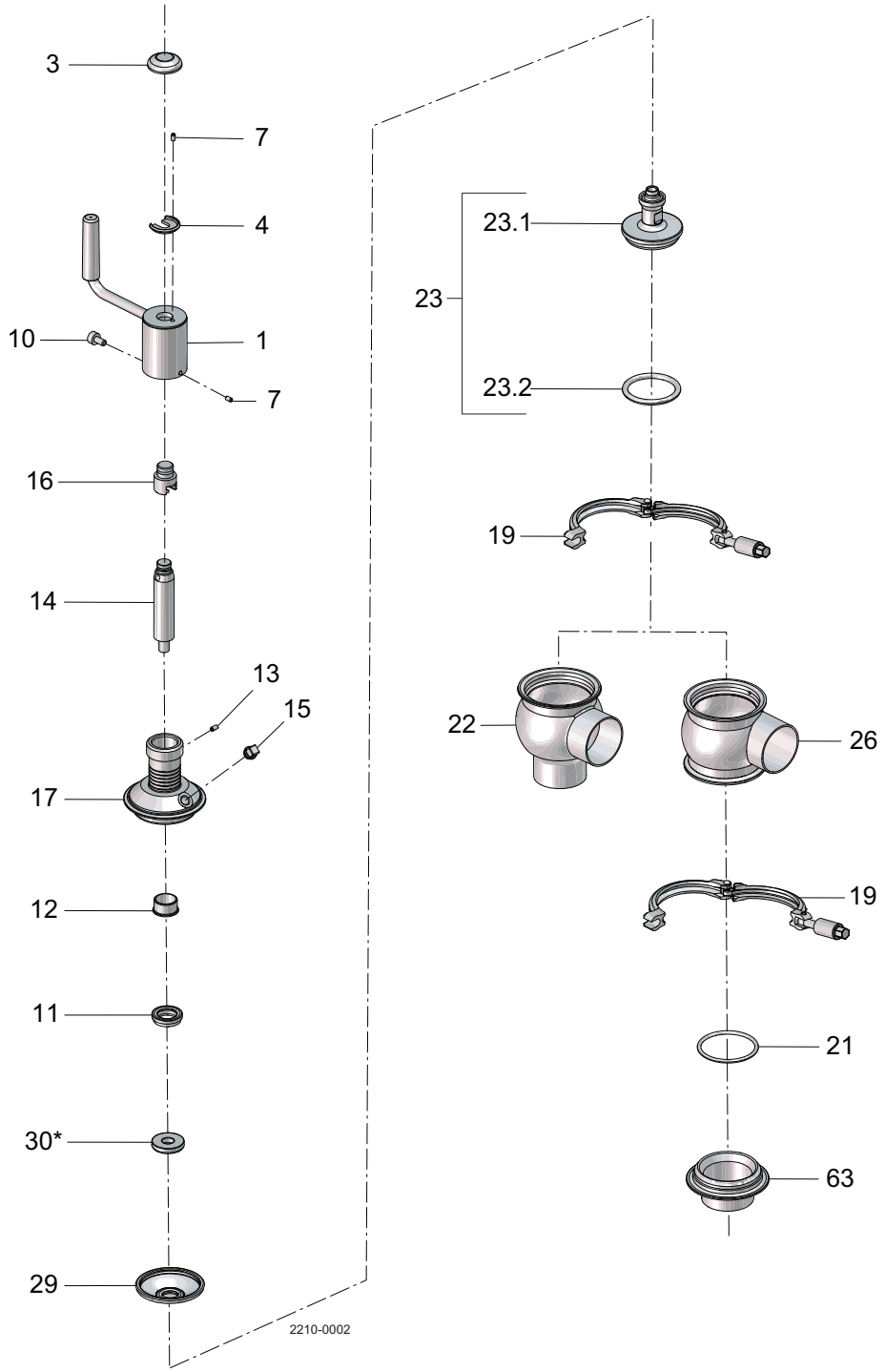

* = Disc not used on DN25/25 mm and DN40/38 mm

It is important to observe the technical data during installation, operation and maintenance.
Inform all personnel about the technical data.

Parts list

Pos.	Qty	Denomination
		Crank mechanism complete
1	1	Crank
3	1	Cap
4	1	Washer
7	2	Set screw
10	1	Lock screw
11	1	Lip seal
12	1	Bushing
13	1	Spring pin
14	1	Upper spindle
15	1	Plug
16	1	Stem extension
17	1	Sealing element
19	1	Clamp
21 ♦	1	O-ring
22	1	Valve body
23	1	Plug, complete
23.1	1	Plug
23.2 ♦	1	Plug seal
26	1	Valve body
29 ♦	1	Diaphragm
30	1	Disc for diaphragm
63	1	Port seal element

Service kits

Denomination	DN25 25 mm	DN40 38 mm	DN50 51 mm	DN65 63.5 mm	DN80 76.1 mm	DN100 101.6 mm
Standard						
♦ Service kit, EPDM	9611926543	9611926544	9611926545	9611926546	9611926547	9611926548
♦ Service kit, HNBR	9611926549	9611926550	9611926551	9611926552	9611926553	9611926554
♦ Service kit, FPM	9611926555	9611926556	9611926557	9611926558	9611926559	9611926560
Tangential only						
♦ Service kit, EPDM	9611926909	9611926910	9611926911	9611926912	9611926913	9611926914
♦ Service kit, HNBR	9611926915	9611926916	9611926917	9611926918	9611926919	9611926920
♦ Service kit, FPM	9611926921	9611926922	9611926923	9611926924	9611926925	9611926926

It is important to observe the technical data during installation, operation and maintenance.
Inform all personnel about the technical data.

7.5 Aseptic manually operated - change-over - sectional drawing

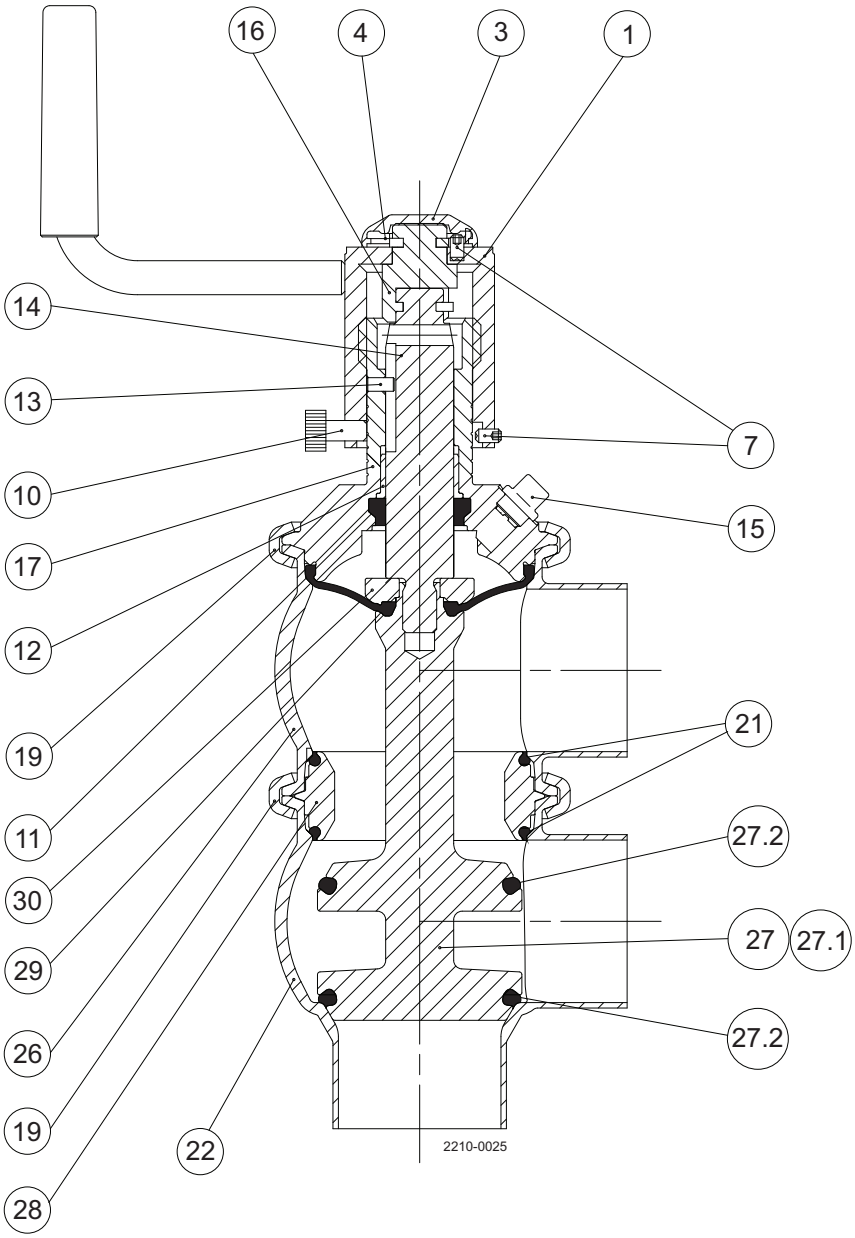

It is important to observe the technical data during installation, operation and maintenance.
Inform all personnel about the technical data.

7.6 Aseptic manually operated - change-over

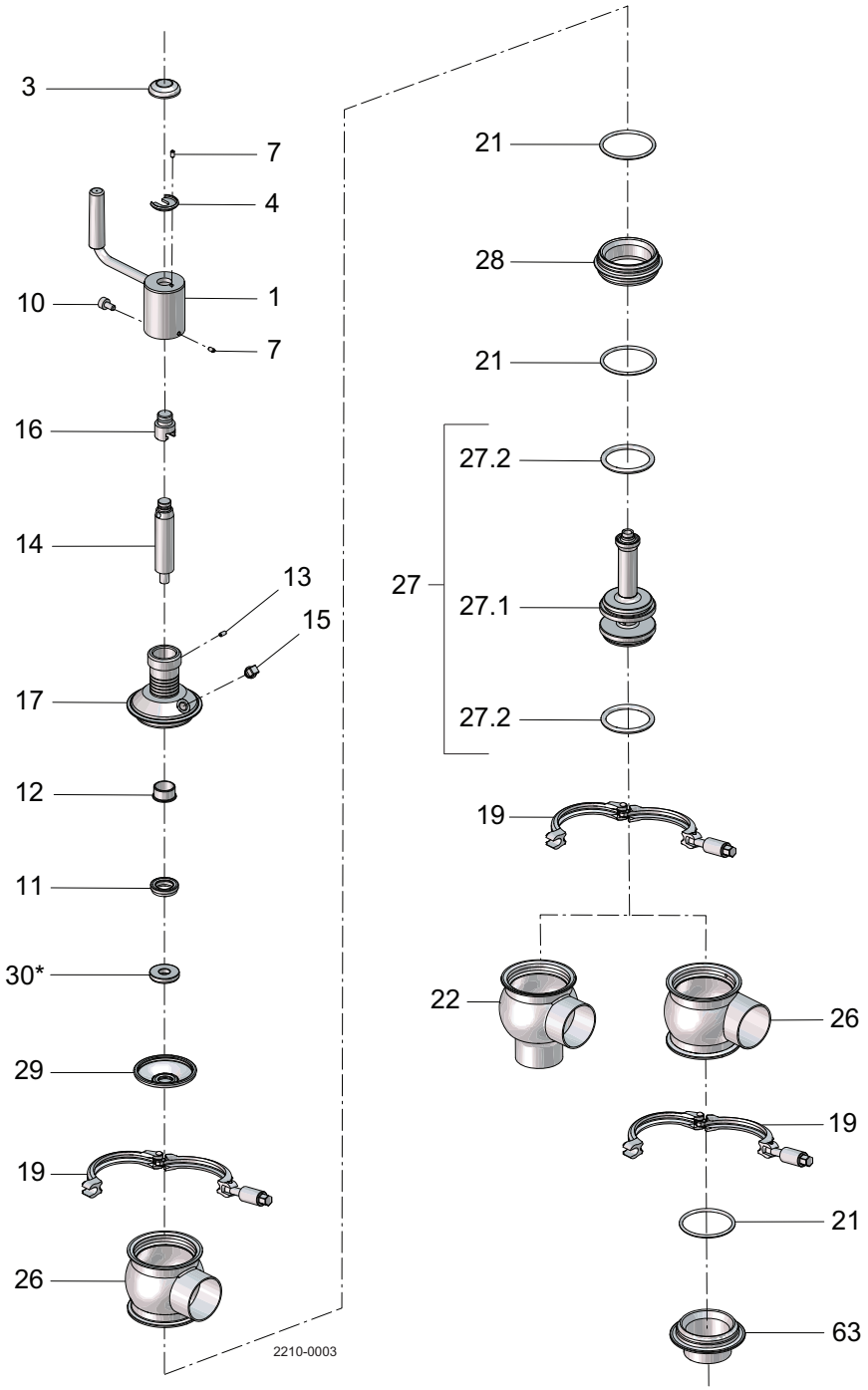

* = Disc not used on DN25/25 mm and DN40/38 mm

It is important to observe the technical data during installation, operation and maintenance.
Inform all personnel about the technical data.

Parts list

Pos.	Qty	Denomination
		Crank mechanism complete
1	1	Crank
3	1	Cap
4	1	Washer
7	2	Set screw
10	1	Lock screw
11	1	Lip seal
12	1	Bushing
13	1	Spring pin
14	1	Upper spindle
15	1	Plug
16	1	Stem extension
17	1	Sealing element
19	2	Clamp
21 ♦	2	O-ring
22	1	Valve body
26	1	Valve body
27	1	Plug, complete
27.1	1	Plug
27.2 ♦	2	Plug seal
28	1	Seat
29 ♦	1	Diaphragm
30	1	Disc for diaphragm
63	1	Port seal element

Service kits

	Denomination	DN25 25 mm	DN40 38 mm	DN50 51 mm	DN65 63.5 mm	DN80 76.1 mm	DN100 101.6 mm
♦	Service kit, EPDM	9611926615	9611926616	9611926617	9611926618	9611926619	9611926620
♦	Service kit, HNBR	9611926621	9611926622	9611926623	9611926624	9611926625	9611926626
♦	Service kit, FPM	9611926627	9611926628	9611926629	9611926630	9611926631	9611926632
Tangential only							
♦	Service kit, EPDM	9611926927	9611926928	9611926929	9611926930	9611926931	9611926932
♦	Service kit, HNBR	9611926933	9611926934	9611926935	9611926936	9611926937	9611926938
♦	Service kit, FPM	9611926939	9611926940	9611926941	9611926942	9611926943	9611926944

Parts marked with ♦ are included in the service kits (product wetted parts)
Tool for bushing (pos. 12) 9613160901

TD900-654

7 Parts list and service kits

It is important to observe the technical data during installation, operation and maintenance.
Inform all personnel about the technical data.

7.7 Aseptic manual tank outlet - sectional drawing

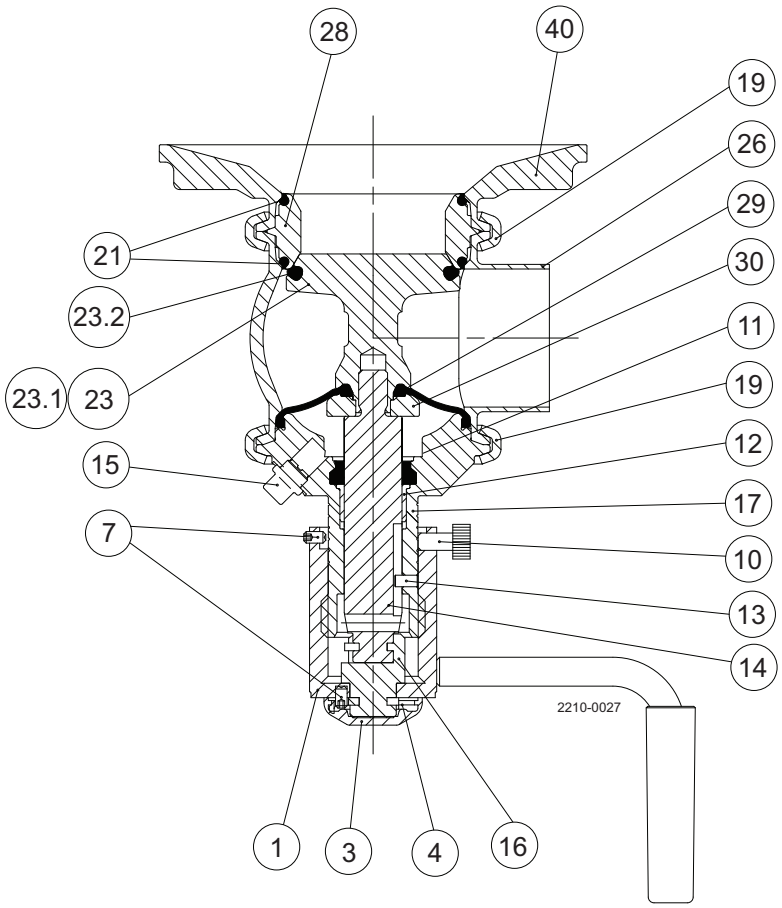

It is important to observe the technical data during installation, operation and maintenance.
Inform all personnel about the technical data.

7.8 Aseptic manual tank outlet

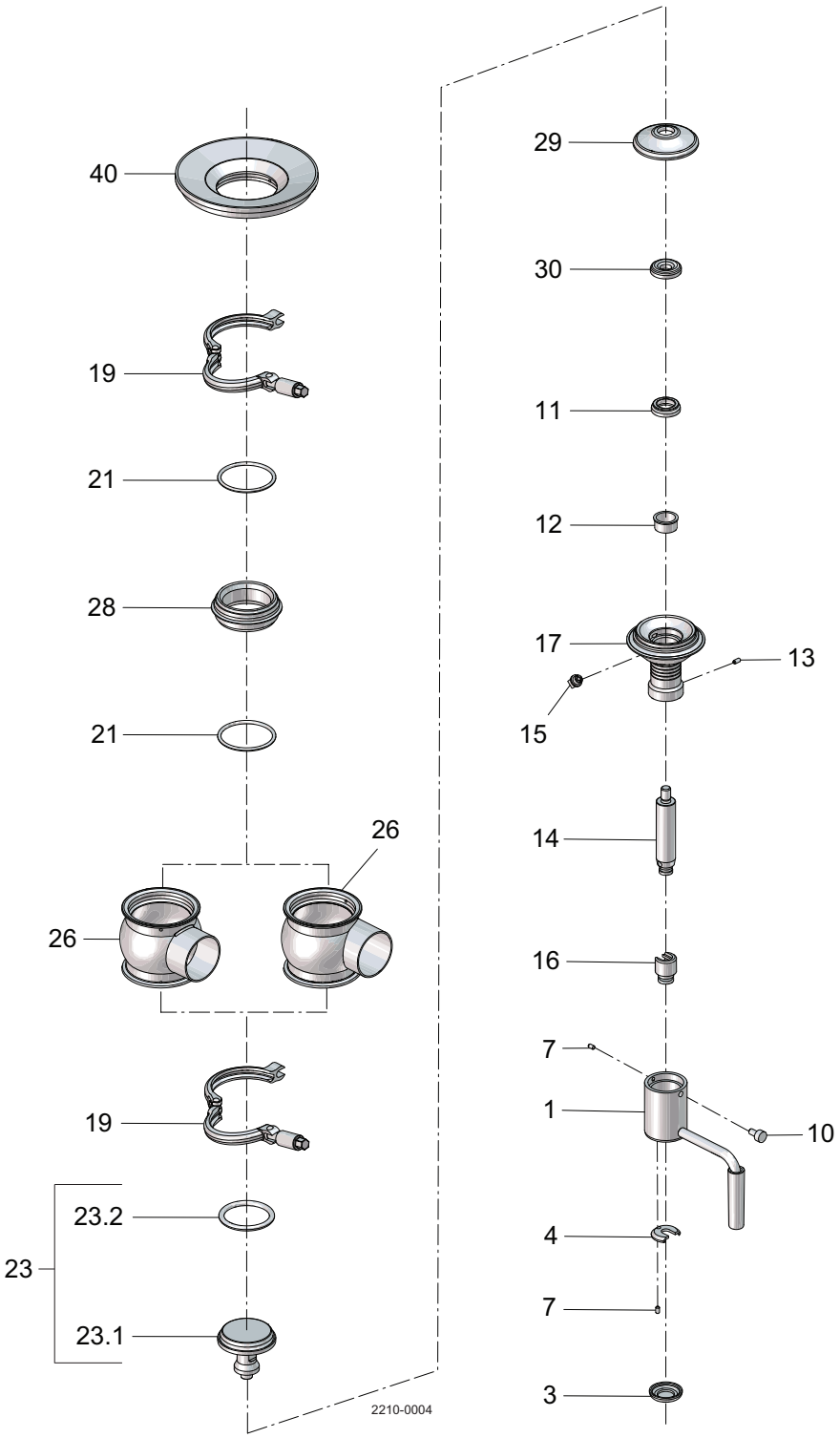

It is important to observe the technical data during installation, operation and maintenance.
Inform all personnel about the technical data.

Parts list

Pos.	Qty	Denomination
		Crank mechanism complete
1	1	Crank
3	1	Cap
4	1	Washer
7	2	Set screw
10	1	Lock screw
11	1	Lip seal
12	1	Bushing
13	1	Spring pin
14	1	Upper spindle
15	1	Plug
16	1	Stem extension
17	1	Sealing element
19	1	Clamp
21 ♦	2	O-ring
23	1	Plug, complete
23.1	1	Plug
23.2 ♦	1	Plug seal
26	1	Valve body
28	1	Seat
29 ♦	1	Diaphragm
30	1	Disc for diaphragm
40	1	Tank flange

Service kits

	Denomination	DN50 51 mm	DN65 63.5 mm	DN80 76.1 mm	DN100 101.6 mm
♦	Service kit, EPDM	9611926945	9611926946	9611926947	9611926948
♦	Service kit, HNBR	9611926949	9611926950	9611926951	9611926952
♦	Service kit, FPM	9611926953	9611926954	9611926955	9611926946

It is important to observe the technical data during installation, operation and maintenance.
Inform all personnel about the technical data.

7.9 Accessories tool

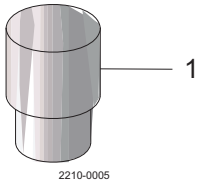

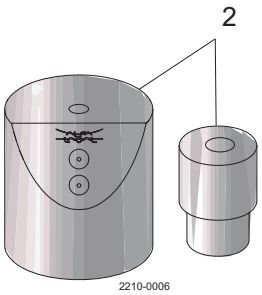

It is important to observe the technical data during installation, operation and maintenance.
Inform all personnel about the technical data.

Parts list

Pos.	Qty	Denomination
1	1	Tool for bushing (pos. 24)
2	1	Mounting tool for elastomer plug seals

How to contact Alfa Laval
Contact details for all countries are
continually updated on our website.
Please visit www.alfalaval.com to access the information directly.

© Alfa Laval Corporate AB
This document and its contents is owned by Alfa Laval Corporate AB and protected by laws governing intellectual property and thereto related rights. It is the responsibility of the user of this document to comply with all applicable intellectual property laws. Without limiting any rights related to this document, no part of this document may be copied, reproduced or transmitted in any form or by any means (electronic, mechanical, photocopying, recording, or otherwise), or for any purpose, without the expressed permission of Alfa Laval Corporate AB. Alfa Laval Corporate AB will enforce its rights related to this document to the fullest extent of the law, including the seeking of criminal prosecution.